SAFETY WARNING SIGNS

This sign denotes a safety warning.

The information behind the sign include important safety information.

Please read and understand this information to prevent personal injuries or deaths.

The machine owner or employer is responsible for instructing every operator to operate all equipment correctly and safely in detailed manner. All personnel operating this machine shall sufficiently understand the contents of this manual.

Before operating the machine, all operation personnel must receive the guidance on related functions of excavator.

Before operating this machine in a working site, learn and practice how to use the machine controls correctly in a safe and spacious place.

The improper methods during operations, checking, and maintenance of machine will result in injuries or deaths. Before any operation, checking, or maintenance of machine, please read and understand this manual.

Please always carry this manual with you. It's preferable to preserve this manual on the machine. If this manual is lost or damaged, please immediately order a new manual from a dealer. At the transfer of this machine, please ensure to hand this manual over to the new owner.

SIGNAL WORDS

The safety information on this manual and machine identifications is indicated by words "Danger", "Warning", and "Notice". The meanings of these signal words are as below:

DANGER

"Danger" denotes high dangerous level, for which the negligence will result in death or serious injury.

WARNING

"Warning" denotes medium danger level, for which the negligence will probably result in death or serious injury.

NOTICE

"Notice" denotes low danger level, for which the negligence will result in minor or medium injuries.

Important: The word "Importance" is intended to alert the operation and maintenance personnel of the possible damages of machine and its components.

It’s impossible for us to predict all possibly existed dangers. Therefore, the warnings in this manual or on this machine can’t cover all possible accidents. Therefore, during the operations of machine, ensure to take cautions and abide by all conventional safety measures to prevent harms to machine, operation personnel, or other personnel.

INTRODUCTION

Foreword

This manual describes the operations, checking, and maintenance of this machine and the safety descriptions to be observed during operations.

- In some details, this manual probably differs from the manual attached on the machine in use.
- Please be noted that the information contained in this manual and the parameters of machine are subject to changes without further notice.

Serial number

Important: Do not disassemble the machine nameplate with serial number. Observe the serial numbers of machine and engine and record them in the blank area below.

Machine No.

Engine No.:

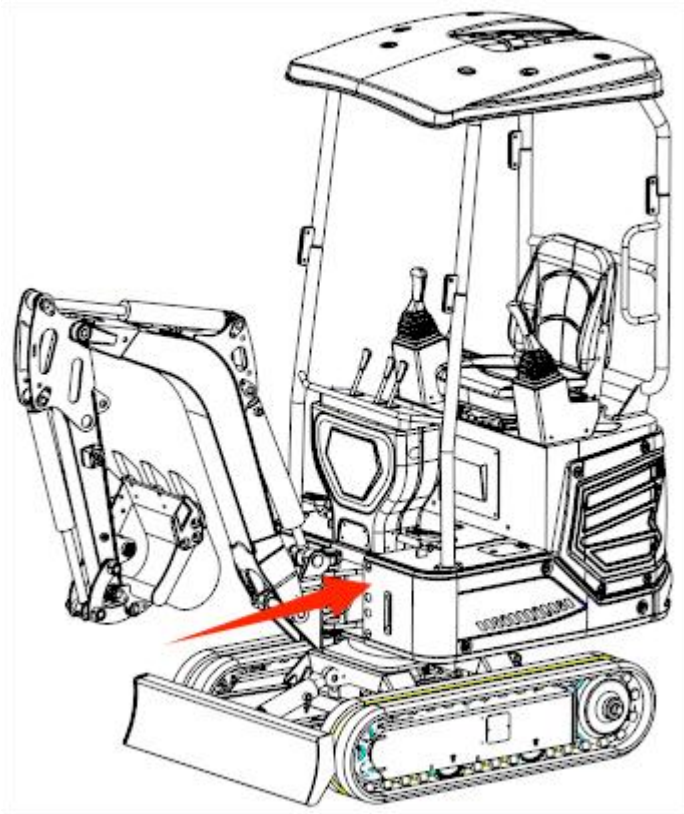

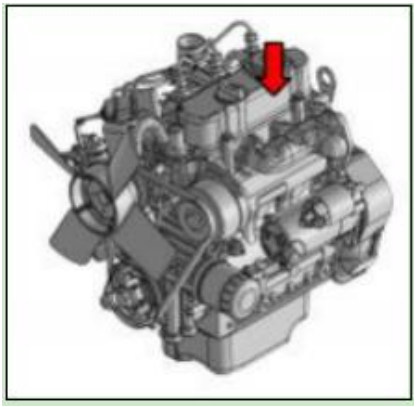
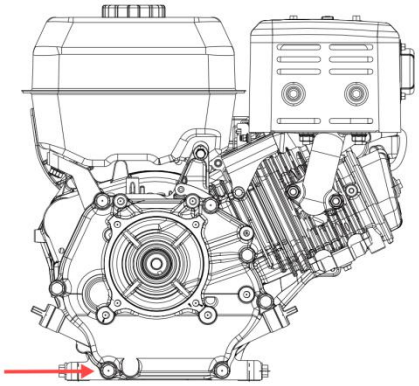
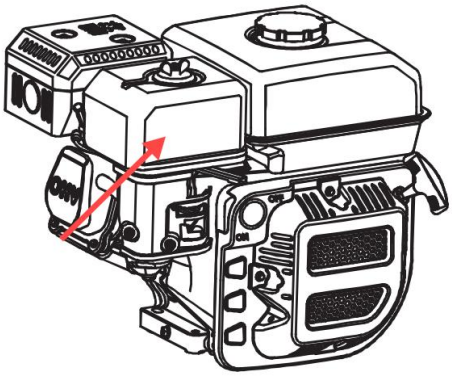

Front, Rear, Left, and Right

The front, rear, left, and right of the machine indicated in this manual are based on the status sitting in the driver seat, with the bulldozing blade visible in the front.

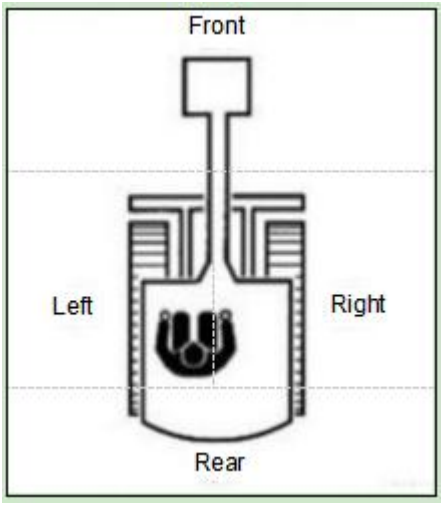

Designated Operations

This machine is mainly applied for following operations:

- Digging
- Ditching
- Side ditching
- Leveling
- Loading

Product Features

- Small size, flexible operation
- Can be equipped with a variety of attachments
- Track width "flexible machine width structure"

Run-in period

For the first 100 hours of the new machine (as indicated by the timer), please follow the instructions below:

Using the new machine without run-in will deteriorate acceleration performance and probably shorten the life of machine.

- Sufficiently warm up the engine and hydraulic oil.
- Avoid heavy-load and rapid operations.Maintain the load at approximately 80% of maximum load capacity during operations.
- Do not start, accelerate, steer, or stop suddenly, unless it’s really necessary.

Notes about Reading of This Manual

Please be noted that the descriptions and graphics contained in this manual probably are not applicable for your machine in use. The numbers in graphics are marked by circles. The same numbers in the descriptions are marked in parentheses. (For instance: ①→(1))

Signs used in this manual

The meanings of the signs used in this manual are as below.

S, x …. Prohibition ……. Lock ……Unlock

SAFETY

GENERAL PRECAUTIONS

You are liable to abiding by the safety laws and regulations of relevant departments and fulfilling the operations, checking, and maintenance of machine.

As a matter of fact, all accidents are caused by the non-compliance with basic safety rules and precautions. Most accidents can be avoided by authenticating the potential dangers in advance. Please read and understand all safety information related to the prevention of accidents. Please ensure to operate the machine only after you have understood how to operate, check, and maintain the machine correctly.

Abiding by All Safety Regulations

● The machine must be operated, checked, and maintained by trained and qualified personnel.

● During the operations, checking, and maintenance of machine, ensure to understand and abide by all rules, regulations, precautions, and safety measures.

● Do not operate, check, or maintain the machine under the adverse influence of alcohol, drug, medicine, or fatigue or under sleepy status.

Upon detection of machine abnormality

During the operations, checking, or maintenance of machine, upon detection of any machine abnormality (Such as noise,vibration, smell, abnormal instrument, smoking or oil leakage, error warning indication, and abnormal display of electric control panel), immediately notify a sales or service dealer and take appropriate measure. Do not operate the machine before the abnormality is solved.

Operating Temperature Range

To maintain the performances and prevent the earlier wear of machine, please abide by the following operating conditions.

● Do not operate the machine when the outside temperature is more than +45℃ or less than -15℃

-The operations under +45℃ outside temperature will probably result in engine overheating and deteriorated engine performance. In addition, the hydraulic oil will probably become really hot to harm the hydraulic devices.

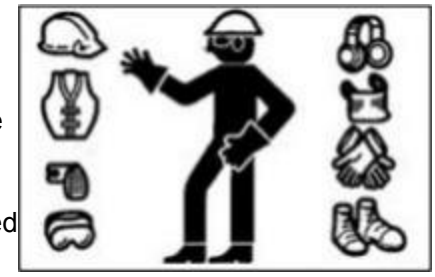

-The operations under 15℃ outside temperature will probably harden the rubber parts (Such as gaskets) and cause earlier wear or damage of machine.

-To operate the machine under the condition beyond above-mentioned outside temperature range, please consult with your sales or service dealer.

Wearing Appropriate Clothing and Protective Appliances

● Do not wear loose clothing or wear decorative articles that will probably hitch to any joystick or motion part.

● Do not wear oil or fuel contaminated clothing that is easily vulnerable to fire.

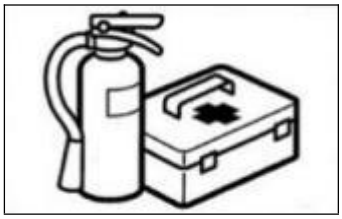

● As per the requirements of working environment, wear safety shoes, safety helmet, safety goggles, filtration mask, thick gloves, ear flaps, and other protective appliances. During the use of grinding miller, breaking hammer, or compressed air, please wear appropriate protective appliances, such as safety goggles and filtration mask, as the splashing of metal chippings or other objects will probably cause serious harms.

● Please use the hearing protection devices during the operations of machine. Exposure to a high noise environment for a long time will result in harm or even complete loss of hearing.

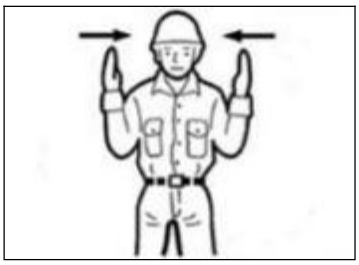

Installation of Fire Extinguisher and First-Aid Kit Fulfill the preparations for fire and accident.

● Install the fire extinguisher and first-aid kit and learn how to use them.

● Learn how to extinguish fire and handle accident.

● Know how to contact emergency aid and fabricate the emergency contact list.

No Disassembling of Safety Devices

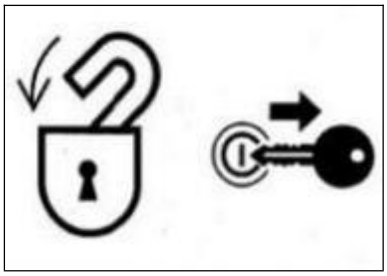

● Please ensure that all guardrails, shelters, and doors are installed properly and securely. Before operating the machine, please repair or replace damaged parts.

● Know how to use safety lock handle, seat belt, and other safety devices and understand the correct operation methods.

● Do not disassemble any safety device, unless for the purpose of checking and repair. Always keep all safety devices under good working condition.

Setup of Signaler and Flagman

Learn how to use the gestures of specific operation needs and designate the person responsible for making gestures.

● All personnel must completely understand all gestures.

● The operator must respond to the gestures of designated person only. However, the operator must abide by the stop gesture made by anyone in all cases.

● The signaler must stand in a clearly visible place while making the gestures.

Precautions for Standing up from or Leaving Driver Seat

● Before standing up from the driver seat to open/close windows or disassemble/install the lower window, lower the working device onto the ground lift up and lock the safety lock handle, and stop the engine.
When the safety lock handle is lowered down (Unlocked), the accidental touch of any
joystick will result in sudden movement of machine and cause serious injuries or deaths.

● Please be noted that, even if the safety lock handle is placed at locking position, the bulldozing blade, boom, and auxiliary hydraulic controls can't be locked. Do not touch such controls accidentally.

● While lifting up or lowering down the safety lock handle, take cautions not to touch any joystick.

Before leaving the driver seat, lower the working device onto the ground, lift up the safety lock handle to locking position, and stop the engine. Meanwhile, ensure to withdraw the key, close the doors and hoods, and carry the key with you and then preserve it in a designated place.

Guard against Fire and Explosion Dangers

Keep fuel, lubricating oil, grease, and antifreeze away from flame. The fuel is especially inflammable and really dangerous.

Handle these inflammable away from ignited cigarette, match, lighter, and other flame or fire source.

Do not smoke or use open fire while handling fuel or performing the operations of fuel system. Do not leave the operation site while filling fuel or lubricating oil.

Do not disassemble the fuel tank cap or refuel while the engine is running or is not cooled down. In addition, do not splash fuel to any machine hot surface or electronic system part.

Immediately clean the overflown fuel or lubricating oil thoroughly.

Check for leakage of fuel and lubricating oil. Please eliminate the leaks and clean the machine before operations. Please move the inflammable to a safe place before polishing or welding operations.

Do not cut or weld any pipeline or pipe that probably contains inflammable liquid. Please clean thoroughly by non-inflammable solvent before cutting or welding.

Remove all wastes and impurities from machine. Ensure that there is no oil contaminated rag or other inflammable on the machine.

Handle all solvents and dry chemicals (Foam fire extinguisher) as per the manufacturer's procedures indicated on the containers. Operate in a well-ventilated place.

Never use fuel for cleaning purpose. Always use non-inflammable solvent.

Please open doors and windows for thorough ventilation during the handling of fuel and the cleaning of oil stain or paint. Preserve all inflammable liquids and materials in a safe and well-ventilated place.

The short-circuit of electric system will probably result in fire. Daily check the wire connections for looseness and damage. Re-tighten loose connectors and cable clamps. Repair or replace damaged wires.

● Fire accident caused by pipelines: Ensure that the clamps, protection devices, and cushion pads of hoses and pipes are securely fixed. In event of looseness, the hoses and pipes will be damaged due to vibration or contact with other parts during operations. This will probably result in spray of high pressure oil to cause fire accident or harms.

Toxic Exhaust Gas from Engine

● Do not operate the engine in an enclosed place with poor ventilation.

● If the natural ventilation is not possible, install ventilation fan, fan, extended exhaust pipe, or other ventilation device.

PRECAUTIONS DURING PREPARATIONS

Understanding of working zone

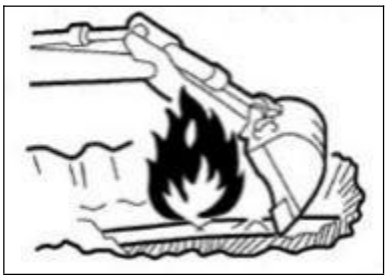

Before starting operations, understand the situation of working zone to ensure safety.

● Check the terrain and ground situation of working zone. For indoor operations, check the building structure and when necessary take safety measures.

● Ensure to keep away from dangers and obstacles such as water ditch, underground pipelines, trees, cliffs, overhead cables,and roads with falling stone or landslide danger.

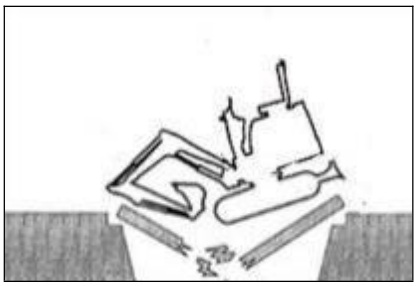

● Check the positions of underground gas pipelines, water pipelines, and electric cables together with administrator. If necessary, discuss with administrator to determine the detailed safety measures to be taken to ensure safety.

● During operations on road, ensure to take the safety of pedestrians and vehicles into consideration.

- Use a signaler and/or signals.
- Isolate the working zone against the access of non-authorized personnel.

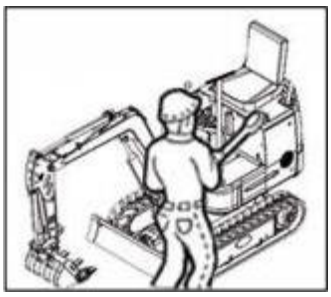

● Before operations in water or driving through shallow rivers, check the water depth, ground firmness, and flow rate in advance.

Understand more operation description information with reference to the “Precautions during Operations”

Checking of Bridge Strength

Please check the permissible load before driving on bridges or structures. If the strength is insufficient, reinforce the bridges or structures.

Always Keeping Clean Machine

● Eliminate all loose objects and unnecessary devices in the machine.

● Wipe away lubricating oil, grease, mud, snow, and ice, in order to prevent accident due to slip.

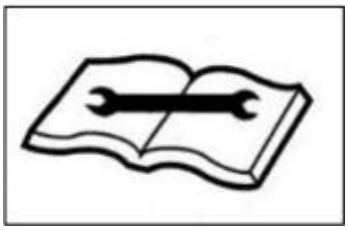

● Remove dusts, lubricating oil, and grease from engine portion to prevent fire accident.

● Clean the area around operator's seat and remove all unnecessary objects from the machine.

Daily Checking and Maintenance

The failure to find out or repair the abnormalities or damages of machine will cause accidents.

● Before operations, fulfill the designated checking and when necessary repair immediately.

● In event of operation failure due to malfunction or engine malfunction, immediately stop the engine as per stop procedure and park the machine securely, till the malfunction is repaired.

Precautions within Cab (If installed)

● Before entering the cab, remove the mud and oil/grease from the shoe bottoms.

Operating the machine pedals with shoe bottoms affixed with mud and oil/grease will result in accidents due to slip.

● Do not place any part or tool around the driver seat.

● Do not place any plastic bottle in the cab or install any sucker on window glasses. The plastic bottle or sucker can play a lens role to probably cause fire accident.

● Do not use a mobile phone during traveling or operations.

● Do not bring any inflammable or explosive into cab.

● Do not leave a lighter in the cab. The lighter will probably explode along with the rise of room temperature.

SAFETY MEASURES AT START

Safety measures when starting

Support your body weight by three-point safety posture while getting on/off the machine.

● Do not jump on or off the machine. Do not attempt to get on or off a moving machine.

● Before getting on or off the cab, firstly open the door completely to locking position and check and ensure that the door can't move further(For machine with cab).

● Face towards the machine, get on/off the footplates, and grab the handrail to support your weight by three-point safety posture (Hands and feet).

● Do not use safety lock handle or any joystick as handrail.

Before starting machine, keep all non-authorized personnel away from this zone Start the engine only after the safe start is confirmed by checking the following items.

● Walk around the machine and alert the repair personnel and the personnel walking around the machine. Start the engine only after it's confirmed that there is no person around the machine.

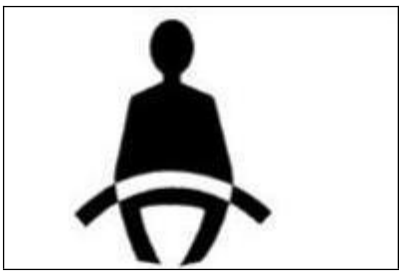

● Check for warning sign "No Operation" or similar sign affixed on cab door, control, or starter switch. If present, do not start engine or touch any joystick.

● Sound the horn to alert the personnel around machine.

Sit in the driver seat and start the engine.

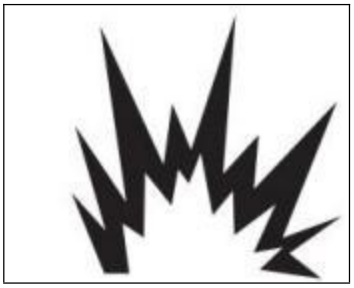

● Adjust the seat till it's securely locked.

● Fasten the seat belt.

● Check whether the parking device is actuated and all joysticks and pedals are in neutral.

● Check whether the safety lock handle is at locking position.

● Ensure there is no person near the machine.

● Start and operate the machine only in driver seat.

● Do not attempt to start the engine by short circuiting the terminals of starter device.

Start by Jumper Cable

Start by jumper cable only as per the recommended method. The improper use of jumper cable will result in battery explosion or unexpected machine motions.

Please refer to "In event of no battery power" to understand more operation description information.

After Start of Engine

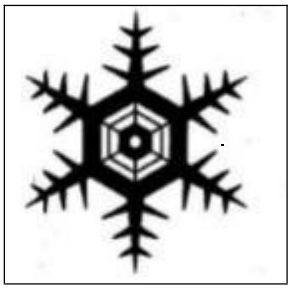

After the start of engine, fulfill following operations and checking in a place without personnel or obstacle. Upon detection of any malfunction, stop the engine as per the procedure and report malfunction.

Warm up the engine and hydraulic oil.

Check all instruments and warning devices for normal functioning. Check for presence of noise.

Test the engine speed control.

Operate all control devices to ensure normal functioning.

For Cold Weathers

Take cautions that the frozen ground, footplates, and handrails are slip. Under cold weathers, do not touch any metal part of machine by bare hands. Your skin will be frozen on metal part to cause serious injuries.

Do not use ethyl ether or starting fluid on the engine. The starting fluid can cause explosion and serious injuries or deaths.

Warm up the engine and hydraulic oil.

Operating joysticks without warm-up will result in slow or inappropriate reaction or movement of machine to cause accident.

OPERATION PRECAUTIONS

Operating Machine with Maximum Track Width

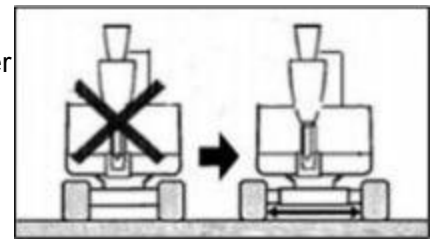

Always operate the machine with extended track width （1100mm）, in order to improve the machine stability to the maximum extent.

Operating the machine with narrow track width (880mm) will probably result in rollover of machine due to poor stability.

If it's necessary to operate the machine with narrow track width (880mm), retract the bucket working device and lower the boom to reduce the gravity center and face the machine towards front before traveling.

Guarantee of Good Visibility

Checking of Visibility before Operations of Machine

During operations in a dark place, turn on the working lamp and headlamp of machine and when necessary install additional lighting devices. In event of poor visibility due to severe weathers (Such as fog, snow, rain, and haze), stop the operations of machine till the visibility turns good.

Clean the windows, mirrors, lamps, and camera to keep good visibility.

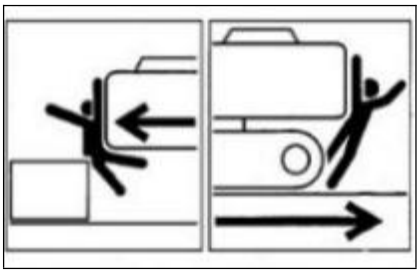

Adjust the mirrors and camera to optimal positions to ensure that the driver sitting in the driver seat can see the rear view (Blind spot).

The non-authorized modification or the installation of non-approved attachments will probably impair the visibility. The operator's visibility must conform to the requirements of ISO 5006.

Do not carry people on the machine

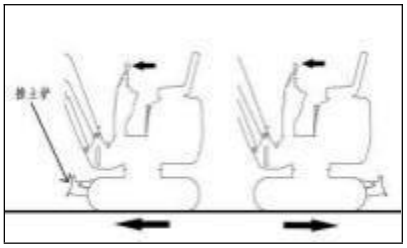

All personnel are prohibited to sit on any part of machine at any time during traveling Or operations of machine.

Checking for Safe and Reliable Working Zone before Operations Verify the performance limits of machine.

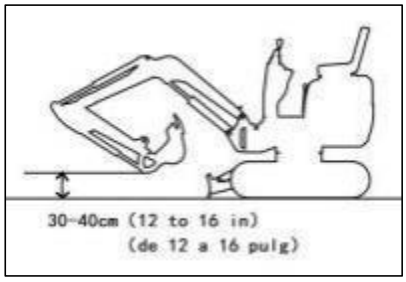

Set up a signaler at the road shoulders, narrow places, or vision-obstructed places. Do not allow any person to access the turning radius or path of machine.

Sound the horn to indicate your movement intention. There are blind zones behind the machine.

Before driving backward, check the safety in the area behind machine and ensure there is no person behind the machine.

Checking of Chassis (Tracks) before Traveling

Before operating the traveling joystick/pedal, ensure that the bulldozing blade is in front of the driver seat. Please bear in mind that the operation direction of the traveling joystick/pedal with bulldozing blade behind the driver seat is reverse to that with bulldozing blade in front of driver seat.

Safe Traveling

The bulldozing blade shall be lifted during traveling. Retract the bucket working device as shown in above diagram and lift the bucket by 30~40cm off the ground.

Do not slew during the traveling. If it's necessary to operate the bucket working device during traveling, operate at sufficiently low speed to ensure the complete control at all times.

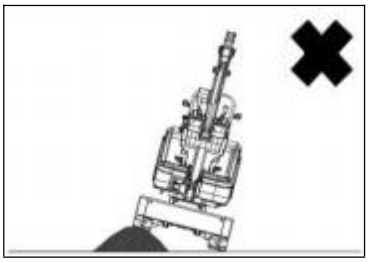

Avoid driving over obstacles whenever possible. If it's necessary to drive over obstacles,

keep the bucket operating device near the ground and travel at low speed. Do not drive over any obstacle that will incline the machine by 10° or larger.

On rugged roads, drive the machine at low speed and avoid the sudden startup, stop, and

direction change. Otherwise, the working device will probably come into contact with the

ground to cause unbalance and damage of machine or destruct the structure in surrounding area.

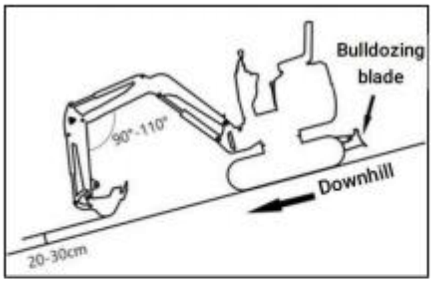

Precautions for Traveling on Slopes

While traveling on slopes, take cautions to prevent the rollover and gliding of machine.

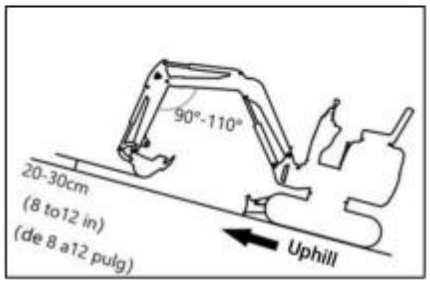

Do not drive the machine on a slope steep enough to cause instability of machine. Please be noted that, in the actual applications, the performances of machine on a slope will be deteriorated due to severe working conditions.

Keep the driver seat facing towards the up slope direction while climbing up a slope. Keep the driver seat facing towards the down slope direction during down slope traveling. In both cases, pay special attention to the ground ahead of the machine during traveling.

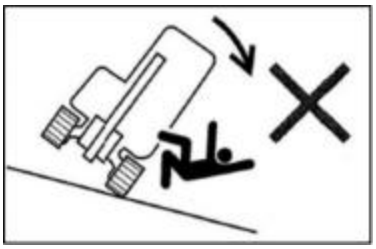

While traveling on a slope, lower the bucket to 20~30cm off the ground.

While climbing up a steep slope, extend the bucket working device to the front position. In event of an emergency, lower the bucket onto the ground and stop the engine of machine.

When walking on slopes or ramps, drive slowly. Reduce engine speed when going downhill. Do not reverse the machine down a slope.

Do not change direction on slopes or cross slopes. First return to the flat surface, and then take another path.

When walking on a gentle slope covered with grass or dead leaves, or when walking on wet metal plates or frozen ground, the machine may slip. Make sure that the machine does not stop laterally on a slope. If the machine stalls on a slope, return the operating levers to the neutral position, and then restart the engine.

Special Cautions for Operations of Machine on Ice/Snow

While traveling on snowy or icy roads, drive at low speed and avoid the sudden startup, stop, and direction change.

In snowy regions, the road curbs and the roadside objects are buried in the snow to become invisible. In addition, there is a danger of machine rollover or collision with covered objects. Therefore, always operate with cautions.

There is a danger of rollover or snow entrapment while driving the machine into thick snow. Drive with cautions and do not drive over road curbs or entrap in the snow.

For frozen soil surface, the ground becomes soft when the temperature rises, which will probably result in rollover of machine and entrapment of operator in the machine.

While parking the machine on a unstable ground, lower the bulldozing blade.

No Movement of Bucket over Personnel

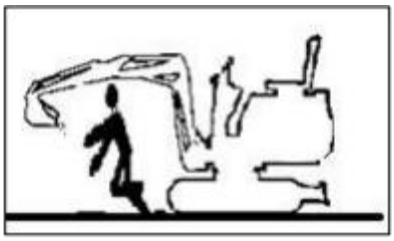

Moving the bucket over the personnel has a danger of splashing of loaded material or the sudden falling of bucket.

Guarantee of Driver's Safety during Loading

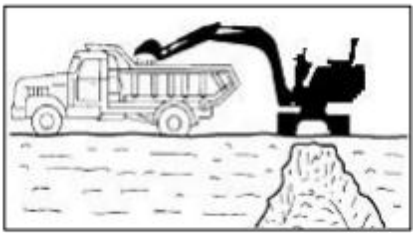

Do not load before the driver reaches a safe place.

Do not swing or position bucket above personnel or cab. Load from the backdoor of trucks.

Keeping a Safe Distance from Overhead High-Voltage Cables

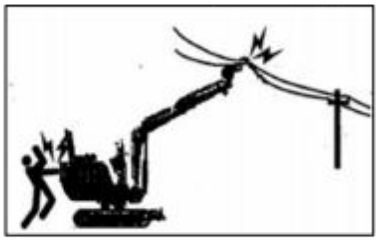

Never close any part or loaded material of machine to high-voltage cables unless all safety measures specified by local and national authorities are already taken. There is a danger of electric shock and death when any person approaches to the machine that is discharging electric spark or is near or in contact with power supply.

Always keep a safe spacing between machine and high-voltage cables. Before starting operations, please verify the relevant operation safety procedures with local power grid.

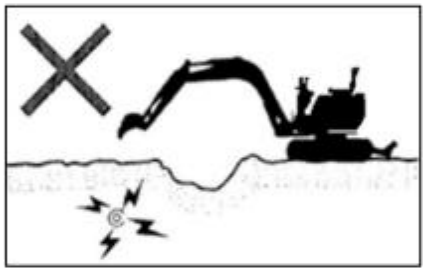

Consider all electric cables as high-voltage cables. Even if it's known or believed that the power supply is cut off or the cable is clearly grounded, consider such cables also as live cables.

If the machine is too close to high-voltage cables, set up a signaler to sound warnings. Keep all personnel within operation zone away from machine and loaded material.

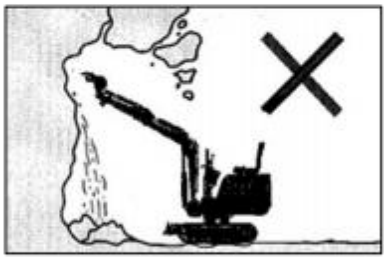

Pay special attention to the underground high-voltage cables.

Close Observation on Dangerous Working Conditions

Never dig on the bottom of any high embankment. It's really dangerous because such operation will probably result in surface collapse.

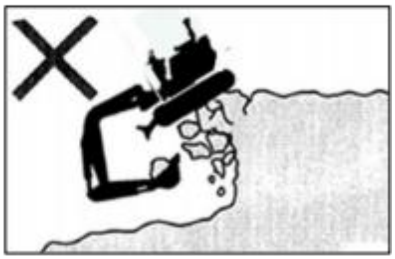

Do not operate in any place with falling stone danger.

Keep a safe spacing between machine and edge of digging site. Do not dig the ground ahead of machine.

During the operations near a cliff or road curb, to ease the escape in any event, form a right-angle between tracks and cliff or road curb and place bulldozing blade in the front.

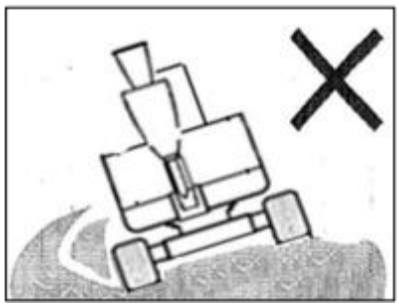

Do not access any soft ground area. This will probably result in inclination of machine due to dead weight to cause rollover or ground entrapment.

Keep away from unstable ground (Cliffs, road curbs, and deep ditches). If the ground collapses due to machine weight or vibration, there is a possible danger of machine falling or rollover. Please bear in mind that the soil turns infirm after heavy rain or explosion.

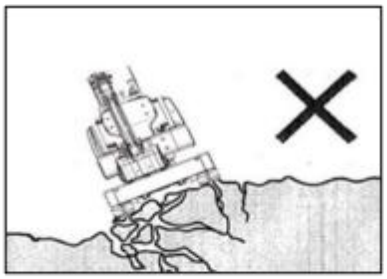

The ground on the top of embankment and the ground around and on top of the dug ditches are also infirm.

Do not perform demolition operations beneath the machine. There is a possible falling danger of machine when the ground becomes unstable.

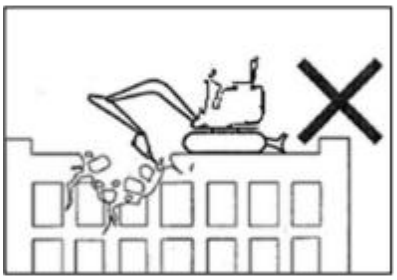

Before the operations on the top of any building or other structure, check the strength and structure. It will cause serious harms or destruction if the building or structure collapses.

Do not perform demolition operations above your head. There is a falling damage of damaged parts or collapse danger of building to cause serious harms or destruction.

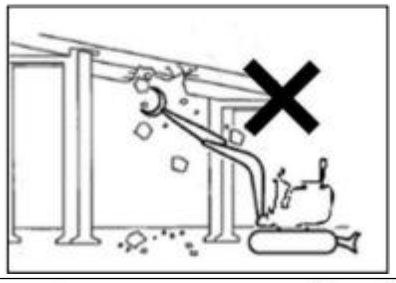

Do not perform the demolition operations by the impact force of bucket working device. The splashed material fragments and the damaged bucket working device have a danger of serious harms

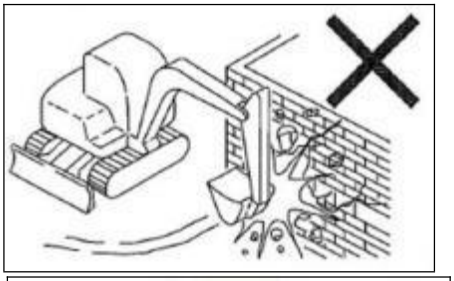

Danger during Operations on Slopes

During operations on slopes, slewing or operating the working device can probably result in instability or rollover of machine.

Avoid operations on slopes whenever possible.

Leveling operation zone

If the bucket is fully loaded with material, avoid slewing towards the down slope direction. Otherwise, it will deteriorate the machine stability and probably result in rollover.

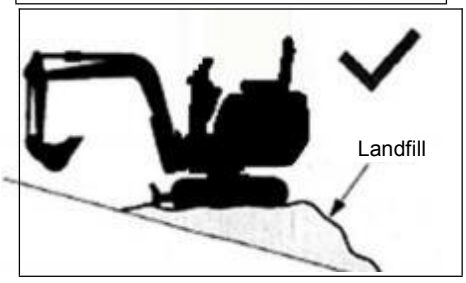

No Lateral Slewing (Swing) with Bucket Heavily Loaded

The machine is more vulnerable to rollover in lateral direction than longitudinal direction.Do not laterally slew (swing) when the bucket working device is heavily loaded. Especially, do not laterally slew (swing) on a slope. When the machine is equipped with breaking hammer, grinder, or extended bucket arm, the attachment end is heavier than that with standard bucket. For machine with such heavy end, do not face the bucket arm (boom) towards down slope direction for digging or towards lateral direction for operations.

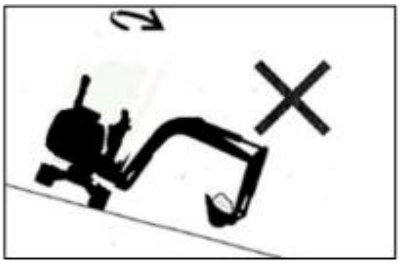

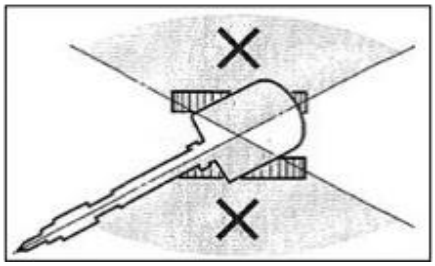

Please pay attention to the objects above your head

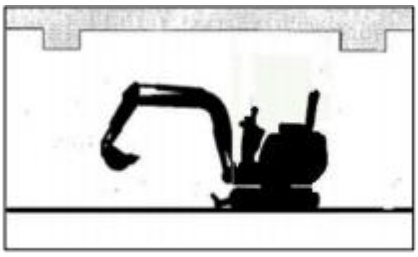

During operations under bridges, in tunnels, near cables, or indoors, guard the boom and bucket arm against impact with any overhead object.

Not Designed for Lifting Application

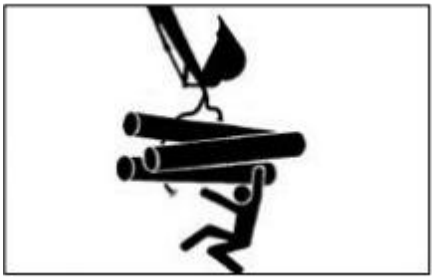

This machine is specially designed for digging operations. Therefore, it's not installed with safety devices for lifting operations. Take special cautions while using this excavator for lifting operations.

Do not overload during lifting. The overload will result in rollover of machine to cause serious injuries or deaths.

All rated lifting capacities are based on the condition of using this machine on a firm and level ground. The user's is recommended to reserve an appropriate allowance for specific working conditions, in order to ensure the safe lifting operations. The soft or uneven ground, non-level status, lateral load, dynamic or sudden load, dangerous environment, and personnel experience are included. Before operating the machine, the operation personnel and other personnel shall be really familiar with the Operation Manual. The safe operation regulations of the machine shall be strictly followed in all

cases. If the chain or lifting device is incorrectly connected, the bucket connecting rod or the lifting device will probably fail to cause serious injuries or deaths.

While using this machine as a crane, do not attempt to pull out a stump from the ground. For this application, the load applied onto the machine is completely unknown.

Do not allow any person to stand on or beneath the lifted object or close to the operation zone.

Please pay attention to flying objects

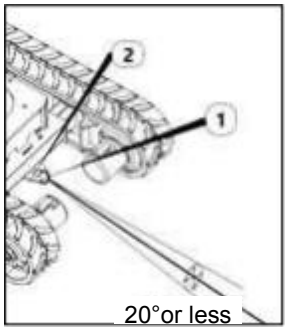

This machine is not installed with any protective device to guard the operator against the harms of flying objects. Do not operate this machine in any dangerous place in which the operator is probably subject to the impact of flying objects.

Precautions for Towing

During towing, the improper operations, the incorrect use of rope, or the improper checking will cause serious injuries or deaths.

The breakage or cracking of rope can cause danger. Use wire ropes compatible with the towing force.

Do not use any kinked, twisted, or even damaged rope. Do not suddenly apply heavy load onto the rope.

Please wear safety gloves during the handling of rope.

Ensure that an operator is assigned each on the towing machine and the towed machine.

Do not operate the towing operation on a slope. Keep all personnel away from the rope during towing.

Please refer to the section "Towing" to understand more description information.

PRECAUTIONS FOR PARKING

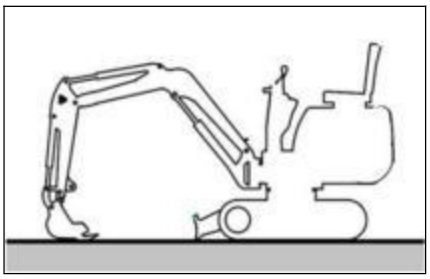

Safe parking

● Stop the machine on a level, solid, and safe ground. Set the parking device.

● If it's necessary to park the machine or tilt the machine on a slope, securely park the machine and block the machine against movement.

While parking the machine in a street, use gratings, warning signs, or lamps to keep the visible even in the night, in order to prevent the impact with other vehicles.

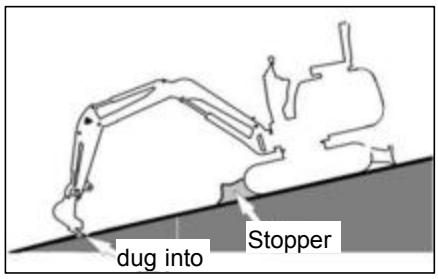

● Complete the following operations before leaving the machine:

Lower the bucket and bulldozing blade onto the ground. Lift up the safety lock handle to the locking position.

Stop the engine and withdraw the starter key.

Lock the cab and hood and carry the key with you.

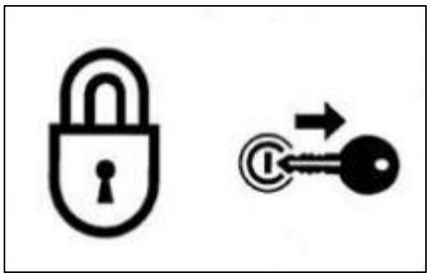

PRECAUTIONS DURING TRANSPORT

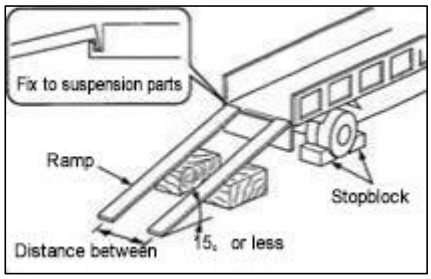

Safe loading/unlocking of machine

The machine will probably roll over or fall off during loading and unloading. Ensure to take the following safety measures:

Select a solid and level ground and keep a sufficient spacing from the road curb. Fix the ramps of sufficient strength and dimensions to the cargo body of truck.

The inclination of the ramps shall not exceed 15° . If the ramps deflect downward excessively, please support the ramps by supports or cushion blocks.

Do not load or unload the machine by working device. Otherwise, it will probably result in rollover or falloff of machine.

Keep the truck cargo body and the ramps clean without oil, sand, ice/snow, or other impurity, in order to prevent the side slip of machine. Clean the tracks.

Block the wheels of transport truck by wedges to prevent movement. While loading or unloading the machine, drive the machine slowly in 1st gear (low speed) as per the signals of the signaler.

Do not change direction on ramps.

Do not slew/swing on ramps. Otherwise the machine will probably roll over.

Slewing (swinging) the machine on the cargo body of truck will probably result in unstable legs of machine. Therefore, operate slowly. If possible, lock the cab doors after loading. Otherwise the cab doors will probably open during the transport.

Plug securely the tracks by wedges and then fix the machine to the truck cargo body securely by ropes or chains.

Safe Lifting of Machine

Master and utilize the correct lifting gestures.

Daily check the lifting device for damaged and missing parts and when necessary replace. Please use the ropes of sufficient capacity for the machine weight during lifting.

Lift the machine as per the procedure described below. Do not operate by any other method, otherwise it will probably result in unbalance of machine.

Please refer to the section “Lifting of Machine” to understand more description information. Do not operate the lifting if there is any operator on the machine.

Operate slowly during lifting to prevent the rollover of machine.

During lifting, keep all personnel away from working zone. Do not move the machine over any person.

Safe Transport of Machine

During the transport of machine, understand and abide by all applicable safety rules, vehicle codes, and traffic regulations.

Take the length, width, height, and weight of the transport truck with loaded machine into consideration, in order to select the best transport route.

During the transport, do not start up or stop the transport truck suddenly or drive at high speed. Otherwise, it will result in movement or unbalance of loaded machine.

PRECAUTIONS FOR MAINTENANCE

Warning Information of "No Operation" Sign

During the checking or maintenance of machine, the start of engine or the touch of any joystick by non-authorized personnel will probably result in serious injury accidents.

Before maintenance, please stop the engine and withdraw and carry the key.

Affix warning information "No Operation " to an eye-catching place such as starter switch and joystick.

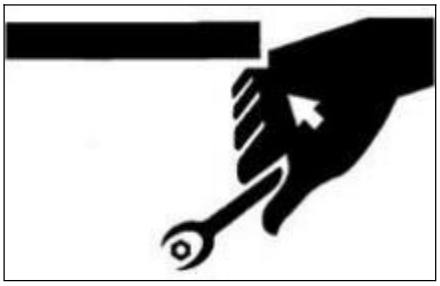

Use of Correct Tools

Do not use any damaged or deteriorated tool or any tool designed for other application. Use tools suitable for related operations.

Periodically Replaced Critical Safety Parts

Replace the fuel hoses periodically. The fuel hoses will wear gradually along with time, even if no wear symptom is visible. Upon detection of any wear symptom, replace the fuel hose, regardless of the replacement schedule. To understand more details, please refer to the section "List of Critical Safety Parts".

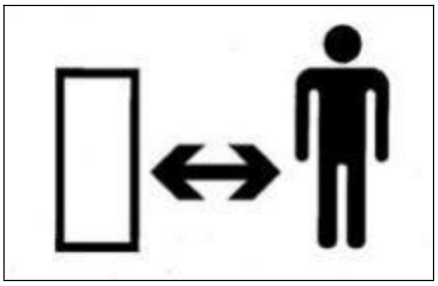

Explosion-Proof Lamps

While checking the fuel, lubricating oil, coolant, and battery electrolyte, please use explosion- proof lamps to prevent fire and explosion. Otherwise, it will probably result in explosion to cause serious injury accidents.

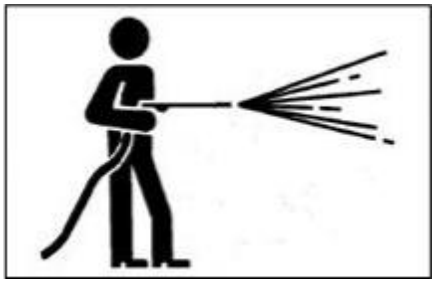

No Access of Non-Authorized Personnel

During operations, the non-authorized personnel are prohibited to access the working zone. Take cautions during grinding, welding, and use of hammer. You will probably be injured by the flying fragments from the machine.

Preparations of Working Zone

Select a stable and level working zone. Ensure the appropriate illumination conditions. For indoor operations, keep well ventilated. Remove obstacles and dangerous goods. Clear slippery areas.

Always Keeping Clean Machine

Please clean the machine before maintenance. Stop the engine before cleaning the machine. Cover the electric parts against water ingress. The water ingress into the electric parts will probably result in short- circuit or malfunction. Do not clean the battery, electronic control units, sensors, connector, or cabby water or steam.

Stop of Engine before Maintenance

While the machine is working or the machine is not working but the engine is running, avoid lubricating or further adjusting the machine.

If the maintenance requires the running of engine, assign two operators for teamwork and keep contact with each other.

One operator must sit in the driver seat to get ready to stop the engine immediately when necessary. This operator must pay special attention not to touch any joystick or pedal, unless it's absolutely necessary.

The other operator for the maintenance must keep the body and clothing away from motion parts of machine.

Keeping Away from Motion Parts

Keep away from all rotating and motion parts. The entanglement of hands or tools into rotating or moving parts will probably cause accidents of serious injuries or even deaths.

The tools or other objects fallen or inserted into the fan or fan belt will be crushed or cut.

Never throw or insert any object into fan or fan belt.

Secure Fixing of Machine and Possibly Falling Parts

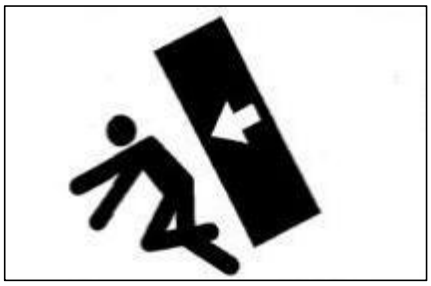

Before the maintenance or repairs beneath the machine, lower all movable working devices onto the ground or lowest position and fix the tracks.

If it's necessary to operate beneath the lifted machine or device, always fix by cushion woods, jack, or other firm and stable supports.

Do not access the area beneath the machine or working device before it's firmly supported.

This operation is especially important for the hydraulic cylinder operations.

Fixing of Working Device

During the repairs and replacements of bucket teeth or side teeth, to prevent the accidental movement of machine, securely fix the working device.

Steady Placement of Opened Engine Hood and Cover

Before operations within the machine, please securely fix the engine hood or machine hood. Keep the engine hood or cover closed under windy weather or while parking the machine on a slope.

Placement of Heavy Weights at Steady Place

If it's necessary to place temporarily heavy weights or attachments onto the ground during disassembling or installation, please ensure to place them in a steady place. Keep the non-authorized personnel away from the place for storage of such objects.

Precautions for Refueling

The smoking and open fire are prohibited during refueling and near the refueling point.

Do not disassemble the fuel tank cap or refuel while the engine is running or is not cooled down. Do not splash fuel to any high temperature surface of machine.

Refuel the fuel tank in a well-ventilated place. Do not top up the fuel tank. Leave an expansion space for the fuel.

Any overflown fuel shall be wiped away immediately.

Tighten the fuel tank cap securely. If the fuel tank cap is missing, replace with original cap only. The use of non-authorized fuel tank cap with poor ventilation will cause internal pressure in the fuel tank.

Do not use fuel for any cleaning purpose.

Use correct fuel grade based on the season.

Handling of Hoses

The leakage of lubricating oil or fuel can result in fire accident.

Do not distort, bend, or impact any hose.

Do not use any distorted, bent, or cracked pipeline, metal pipe, or hose, otherwise it will probably result in burst. Re-tighten any loose connector.

Absolution Caution during Handling of High Temperature and High Pressure Parts

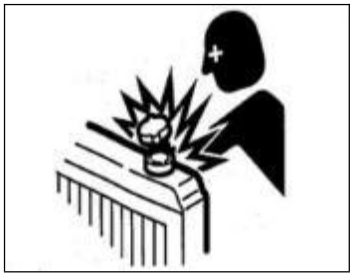

Please stop the engine and wait for the machine to cool down before maintenance.

The engine, exhaust pipe, radiator, hydraulic pipes, sliding parts, and many other machine parts are really hot when the engine is just stopped. Touching such parts can cause scalding.

The engine coolant, hydraulic oil, and other fluids are also under high temperature and high pressure status.

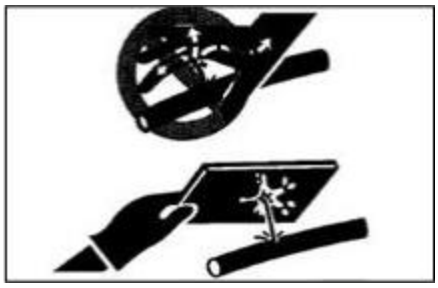

Take cautions not to touch the hydraulic oil while loosening engine hood or connector.

Operating the machine under such condition will cause out-spray of hot oil to result in scalding or injuries.

Absolution Caution during Handling of High Temperature and High Pressure Parts

Do not disassemble the radiator cap or drainage plug when the coolant is hot.

Stop the engine and wait for the engine and coolant to cool down. Slowly loosen the radiator cap to relieve the internal pressure and then take it out.

Caution against Internal Oil Pressure

Take caution against internal oil pressure. After the stop of engine, the pressure in the hydraulic oil pipes can hold for a long time.

Before the maintenance, thoroughly relieve the internal pressure.

The high pressure of hydraulic oil can penetrate skin and eyes to cause serious injuries and blindness or even death. Please bear in mind that the hydraulic oil permeating from orifices is nearly invisible to naked eyes. While checking for leakage, wear goggles and thick gloves and protect the skin by paper boards or plywood to

protect against the harms of spraying hydraulic oil.

The hydraulic oil penetrating into your skin must be cleared by a doctor familiar with such injuries with surgical method within several hours.

Pressure Relief before Operations of Hydraulic System

Disassembling cap or filter or disconnecting pipeline before the pressure relief of hydraulic system will probably result in out- spray of hydraulic oil.

- Slowly loosen the bleeding plug to relieve the pressure of oil tank.
- While disassembling connector or plug or disconnecting hose, stand on one side, loosen slowly to gradually relieve internal pressure, and then take out.
- The engine oil or oil plug will probably spray out under the internal pressure of traveling motor oil tank. Please slowly loosen the oil plug to relieve the internal pressure.

Guard against Splashed Fragments during Use of Hammer

During the use of hammer, the pins and the metal fragments will probably fly out. It will probably cause serious personal harms.

- While hammering hard metal parts such as pins, bucket teeth, side teeth, and bearings, please wear protective articles including goggles and gloves.
- While hammering pins and bucket teeth, ensure there is no person in surrounding area.

Guard against High Pressure Grease

In the track pensioner, the grease is injected under high pressure If the tension is not adjusted by the following designated procedure, the grease relief valve will probably fly out to cause injuries.

- Never loosen the grease pipe fittings.
- Slowly loosen the grease relief valve. Do not rotate it for >1 turn.
- Do not place your face, arms, legs, or body in front of the grease relief valve.
- If no grease flows out when the grease relief valve is loosened, the valve is malfunctioned.

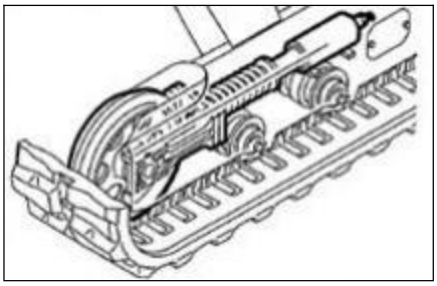

No Disassembling of Track Pensioner

The track pensioner is installed with a high strength spring. If the track pensioner is disassembled carelessly, the spring will spring out to cause serious injuries. Do not disassemble the track pensioner.

Operations of Additional Devices

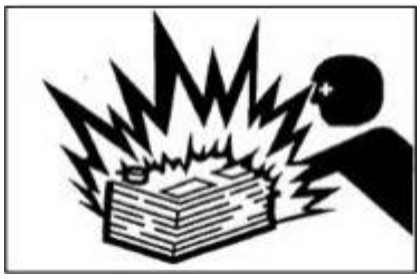

Take special cautions while handling the high pressure nitrogen stored in the tank. The improper handling will probably result in explosion of nitrogen to cause serious injuries. Please strictly abide by the following safety measures:

- Do not break up or disassemble.
- Keep away from open fire and fire source.
- Never drill hole, weld, or melt.
- Guard against physical vibration, such as hammering, rolling, and falling.
- Bleed the sealed air before handling the cylinder body.

Disconnection of Battery Cables

Please disconnect the battery cables before operations or electric welding of electronic system. Firstly disconnect the negative (-) cable of battery. During re connection, finally connect the negative (-) cable of battery.

Caution during Handling of Battery

- The battery contains sulfur acid. The accidental touch will harm your eyes or skin.

In event of accidental contact with eyes, immediately flush by clean water and quickly seek for medical treatment. In event of accidental swallowing, drink a lot of water or milk and immediately seek for medical treatment.

If the sulfur acid comes into contact with your skin or clothing, immediately flush by a lot of water.

- Wear goggles and gloves during handling of battery.
- The battery can generate inflammable hydrogen to probably cause explosion. Keep away from fire sources including open fire, spark, and ignited cigarette.
- Use a flashlight to check the electrolyte level.
- Ensure to turn off the starter switch and stop the engine before checking or handling battery.
- Never touch the electrodes by any metal tool or object, in order to prevent short- circuit.
- The loose electrodes can generate electric spark. Ensure to tighten any loose electrode.
- Ensure that the battery cover is securely covered.
- If the battery is frozen, do not charge the battery or attempt the jumper start of engine, otherwise it will probably cause explosion. Before use, heat the frozen battery to 15°C.
- Do not use the battery when the electrolyte level is below the lower limit. Otherwise it will speed up the internal aging and shorten the life of battery. In addition, it can lead to burst (explosion).
- Do not fill the distilled water till the level is above the upper limit. Otherwise the electrolyte will leak out. The contact with such electrolyte can harm your skin or corrode the machine parts.
- Clean the surrounding area of electrolyte level marking by a wet cloth and check the level. Do not clean by a dry cloth, otherwise it can cause electrostatic accumulation and combustion or explosion.

Periodically Replaced Critical Safety Parts

- To guarantee the safe operation of machine for a longer time, add the oil and fulfill the checking and maintenance periodically. To promote the safety, periodically replace the critical safety parts, including hoses and seat belts. To understand more details, please refer to the section “Periodically Replaced Critical Safety Parts”.
- “Periodically replaced critical safety parts” refers to the parts aged, worn, and functionally deteriorated after repeated use. The performances of such parts will change along with time. These characteristics of such parts can cause serious mechanical damages or personal harms and the remaining lives of such parts can’t be judged by merely appearance checking or operation hand-feel.
- Upon detection of any visible damage on the appearance, please replace the “periodically replaced critical safety parts”, even if the designated replacement period is not reached.

Jumper Start with Battery Charging Cable

- To start the engine by battery charging cable, ensure to connect the cable correctly as per following procedure. The incorrect connection of cable can cause discharging and battery explosion.

- Keep the “Malfunctioned machine” and “Rescue machine” away from mutual contact.
- Never touch the positive (+) and negative (-) electrodes of battery charging cable with each other or with the machine.
- During connection, firstly connect the positive electrode of battery charging cable to positive (+) terminal. During disconnection, firstly disconnect the negative (-) terminal (grounding terminal) from the negative cable.
- Ensure to connect the cable clamps securely.
- Connect the last clamp of battery charging cable to a place as far as possible from the battery.
- To start the engine with battery charging cable, always wear goggles and gloves.
- Use the battery charging cable and clamps of dimensions suitable to the battery capacity. Never use damaged or corroded battery charging cable or clamps.
- Ensure that the battery capacity is same for the “Malfunctioned machine” and “Rescue machine”.

Asking for Welding Repair

The welding operations, if necessary, must be fulfilled by competent personnel in a working site with complete equipment. To prevent damaging any machine part by over-high current or electric spark, please abide by the following precautions.

- Disconnect the battery cables before electric welding.
- Do not apply 200V or higher voltage continuously.
- Connect the grounding point within 1m reach from the welding area. Do not connect the grounding terminal near the electronic control device/instrument or connector.
- Ensure there is no seal ring or bearing between welding area and grounding terminal.
- Do not connect the grounding terminal to the any place near the working device pin or hydraulic cylinder.
- Before the welding of machine body, disconnect the connector of electronic control device.

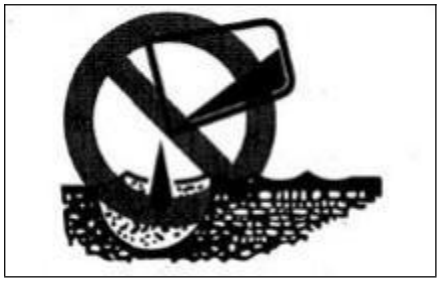

Waste Disposal

- Ensure to collect the drained oil of machine into a container. The improper treatment of waste oil will pollute the environment.
- While disposing harmful objects, including lubricating oil, fuel, coolant, solvent, filter, and battery, please abide by the applicable laws and regulations.

Disposal of Harmful Chemicals

The direct contact with harmful chemicals will cause serious harms. The harmful chemicals used in this machine includeoils/greases, battery electrolyte, coolant, paint, and adhesive. Please dispose the harmful chemicals carefully and properly.

SAFETY SIGNS

To guarantee the safety of operator and operation personnel in the working zone, please set up the following safety signs (markings) at some portions of machine. Walk around the machine with this manual and observe the contents and placement locations of these safety signs. Please review these signs and operation instructions contained in this manual jointly with the machine driver.

- The safety signs shall be clean, clear, and easily legible.

Schematic diagram for safety signs:

1. Precautions for adjusting caterpillar band tension: this sign is located on both sides of caterpillar band beam.

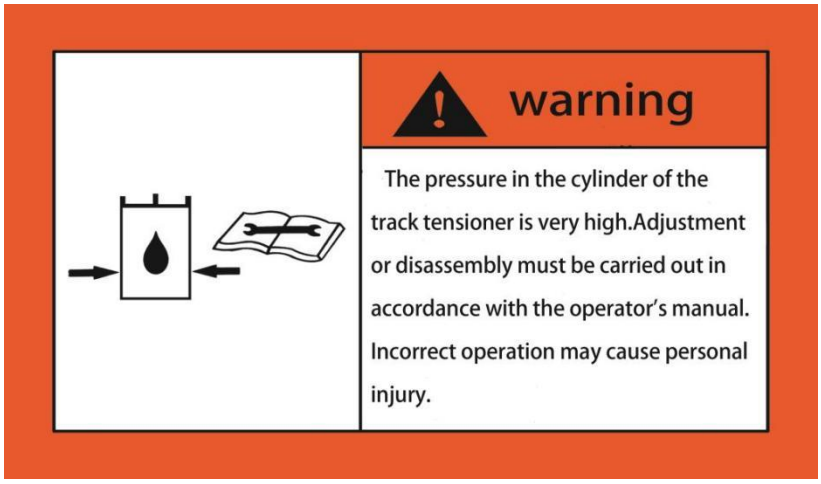

The pressure in the oil cylinder of the belt tensioner is very high. Adjustment or disassembly of the belt tensioner must be carried out in accordance with the operator's manual. Incorrect operation may cause personal injury.

2. The grease filling sign is located on the key structure lubrication diagram:

3.Pay attention to warning signs such as precautions for diesel replacement, loading warning, movement and operation warning, high-voltage line, reading instructions, road lock and height warning signs. These signs are located on the oil seat cover.

4. Sign away from turning area:

This sign is located on the rear counterweight.

▲ No one is allowed to stand within the rotating area of the mini-excavator.

▲ Do not damage or remove the sign from the mini-excavator.

5. Fuel sign:This sign is located at the fuel tank filler.

▲ Turn off the engine when filling fuel, and keep away from all open flames when filling fuel.

▲ Pay attention to view the precautions on the fuel label.

▲Do not damage or remove the sign from the mini-excavator.

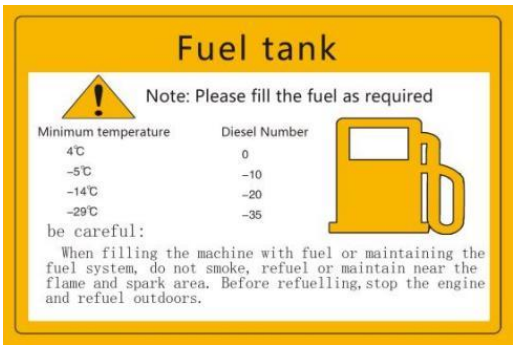

6.Precautions for use of battery:This sign is located on the foot pedal above the battery (pay attention to watch this sign)

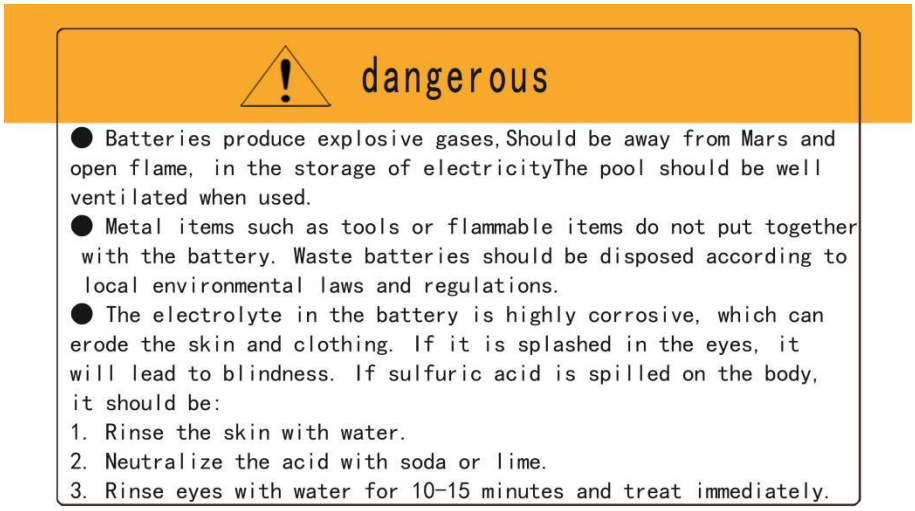

7.No one is allowed to stand in the operation area: this sign is located on both sides of the working arm.

8.Stay away from the excavation area: this sign is located on both sides of the bucket arm.

9.Hydraulic tank sign: this sign is located on the housing at the hydraulic oil tank.

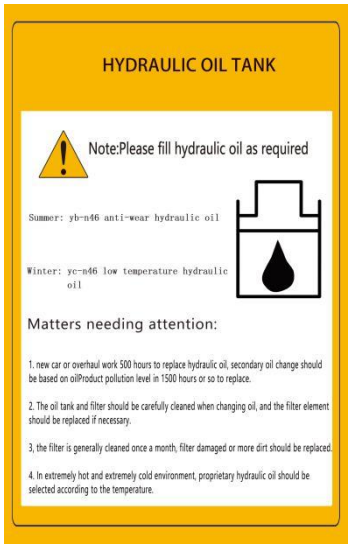

10.Danger sign for hydraulic oil tank : this sign is located on the tank cover plate.

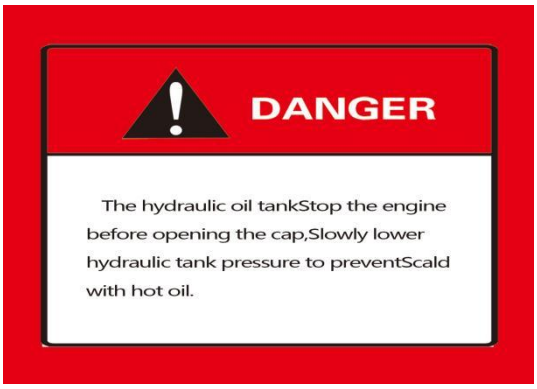

11.Gasgasoline marking sticker (open under the seat-gasoline engine).

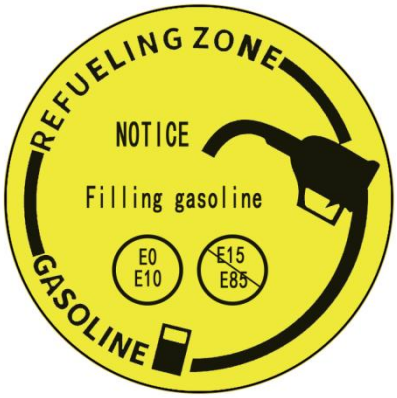

The precautions recorded in this manual and the label with ⚠ symbol posted on the mini-excavator are important items that may lead to personal accidents. If the label with ⚠ symbol is dirty or falls off, you must purchase it from the local sales store and post it in the designated position.

Sign on precautions The operation manual determines the matters needing special attention when using the mini-excavator as follows:

⚠ dangerous It means that failure to observe the precautions will result in death or serious injury.

⚠ Warnin It means that failure to observe the precautions will result in death or serious injury.

⚠ Not It means there is a risk of injury if precautions are not followed.

Precaution It means that if the precautions are not observed, the mini-excavator will be damaged or cause failure.

Suppleme It means other supplementary instructions that are helpful for use.

Before using the mini-excavator, please read and understand the operation manual carefully to ensure safe operation. For safe operation, please observe the above precautions and attach the supplement sign here to ensure safety first.

1. Battery maintenance sign:

Children are not allowed near the device
Beware of acid corrosion
Refer to instructions
No fire
Wear protective glasses
Beware of explosive gases

Please read the instructions carefully before use

Note: when using this mini-excavator, please turn off the power in time to prevent battery loss from bringing unnecessary trouble to you.

2. Daily inspection:

▲ please confirm whether there are abnormal faults (such as oil leakage, loose bolts and nuts, loose electrical wiring, end wires, terminals, etc.) during the last use.

If there is a fault, please dispose it accordingly.

▲Please use the specified brand for fuel and grease.

3. Operation diagram for working device

▲Check whether the mini-excavator control mode is consistent with that indicated on the label. If there is

a difference, replace the label before operating the mini-excavator to match the mini-excavator control mode.

▲If the mini-excavator is not operated according to this procedure, it may cause casualties (refer to the operation warning).

3.Mechanical operating system (forehand)

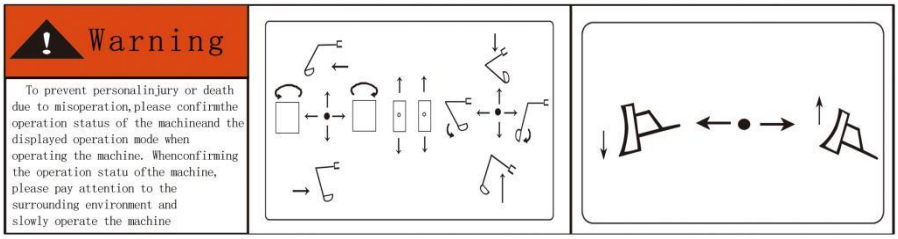

4. When pulling up the bucket, no one is allowed to enter under the bucket.

When pulling up the bucket, please do not touch the overhead wires or obstacles. In particular, death may be caused by electric shock when touching wires, so please pay attention to this matter.

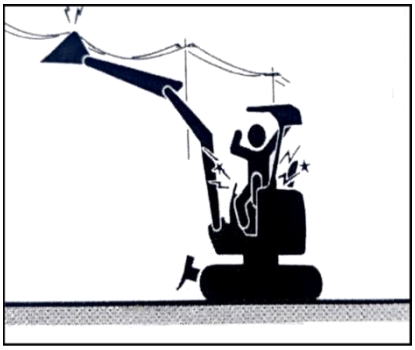

5. Take safety as the guideline, do not drive when you are drinking, taking medicine and in poor health, otherwise it will cause accidents.

CONTROLS

COMPONENT NAME

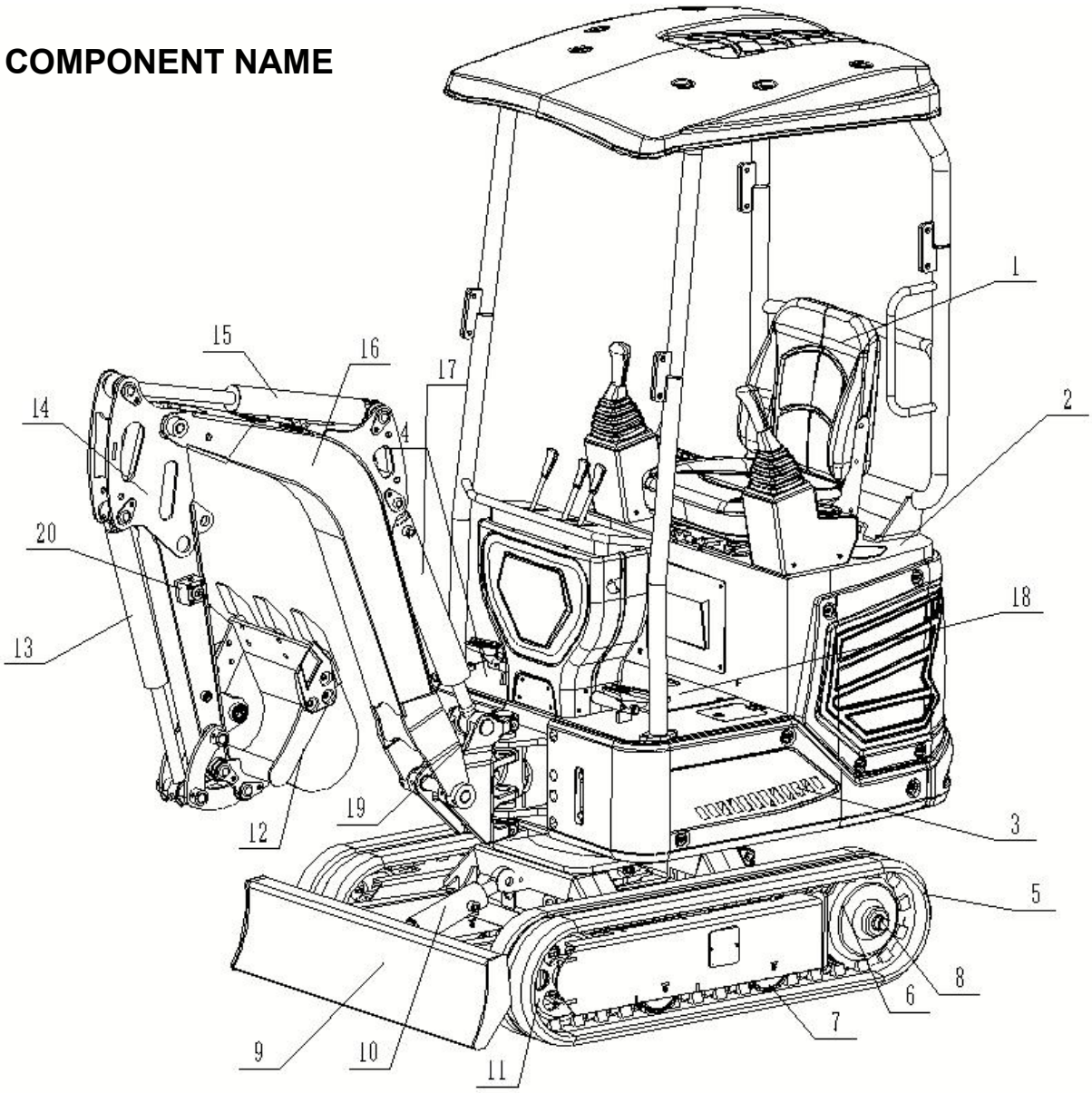

Up frame	Chassis	Working device
1. Seat	5. Track	12. Bucket
2. Engine hood	6. Drive wheel	13. Bucket cylinder
3. Fuel tank	7. Track roller	14. Arm
4. Hydraulic oil tank	8. Traveling motor	15. Arm cylinder
	9. Bulldozer blade	16. Boom
	10. Cylinder of blade	17. Boom cylinder
	11.Guide the wheel	18. Swing joint
		19. Swing cylinder
		20. Hydraulic circuit

FUSE CASE, FUEL FILLING PORT, SEAT

Fuse Case

This case is functioned to protect the electric system against over-current.

Open

1. Insert the hood key and turn it counterclockwise to unlock the maintenance cover.
2. Lift the hood lock and lift the maintenance cover.
3. Locate the fuse box.

Close

1. Unlock the limit lever and close the maintenance cover.
2. Insert the hood key and turn it clockwise to lock the maintenance cover.

Fuel filling port

WARNING

- During the refueling into the fuel tank, keep away from heat source and open fire and do not smoke.
- Refuel the fuel tank in a well-ventilated place. Stop the engine before refueling.
- Any overflown fuel shall be wiped away immediately.
- Do not top up the fuel tank. Leave an expansion space for the fuel.
- Tighten the fuel tank cap securely.

Opening

1. Insert the hood key and turn it counterclockwise to unlock the maintenance cover.
2. Lift the hood lock and lift the maintenance cover.
3. Hold the fuel tank cap and turn it counterclockwise to unlock the fuel cap.

Closing Fasten the fuel tank cap and turn it clockwise to lock the fuel cap.

SEAT

WARNING

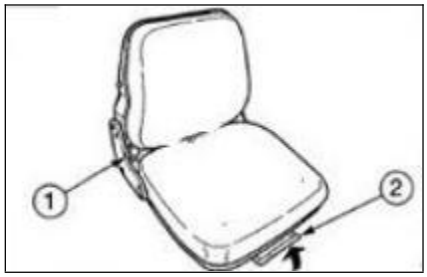

Adjustment and Fixing of Seats (For high-end seats only)

A. Adjust the backrest angle

1. Stand up straight and sit back on the seat.
2. Adjust the backrest to the angle you want by rotating the handle

B. Front and back adjustment

1. Pull up the adjustment lever (2), slide the seat back and forth, and adjust it to the position you want when operating the machine.
2. Loosen the adjustment handle (2) at the position you want to fix the seat.

ELECTRICAL CONTROL PANEL

Panel Name and Description：

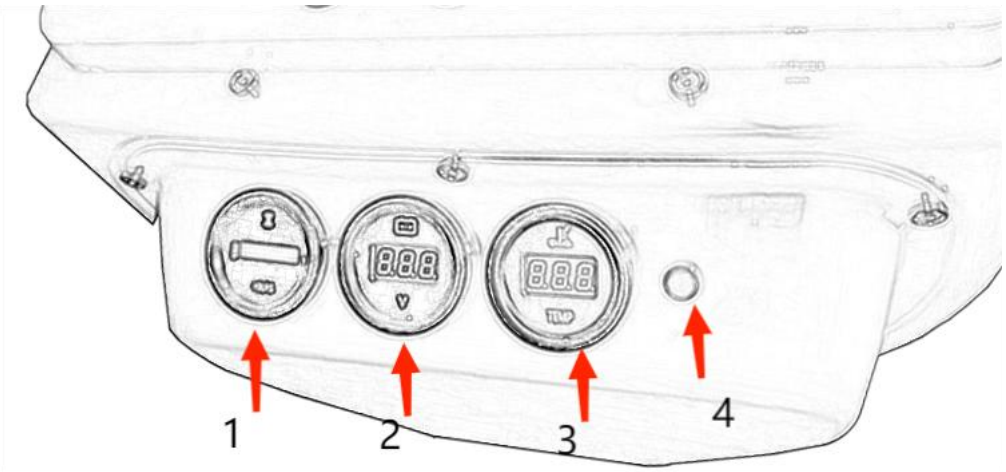

NO.	DESCRIPTION	NOTE
1	Hour meter	Display working hours, the range is 0-9999.9h.
2	Battery voltage display table	Display the battery voltage. When the voltmeter shows that the pressure is lower than 11, the battery feed is serious
3	Water temperature meter	Shows the change of cooling water temperature.
4	The oil display	Detect oil pressure

Note: only one model, some models have hourly meter and voltmeter, and the above pictures are for reference only.

Precautions

This instrument is a water-proof instrument, featuring stable performance and high conciseness and elegance, and is an intelligent instrument developed specially for small excavators. To guarantee the stable data and prolong the life of instrument, please notice the following issues:

1. Do not disassemble the instrument without permission.
2. Never brutally hammer or knock the instrument.
3. Guard against external damages.
4. Keep clean the panel. Any organic solvent or corrosive liquid, including diesel and gasoline, shall be timely wiped away, in order to prevent corroding the panel.
5. Should you have any question during use, please timely contact service personnel.

SWITCHES

Starter Switch

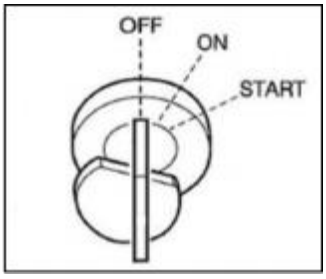

Important: Do not rotate the starter key from OFF to ON and then from ON to OFF
repeatedly within a short time, otherwise it will probably result in engine malfunction.

OFF …… This position is used to stop the engine and insert and withdraw the starter key.

ON …… Engine running position. All electric devices are functional at this position.

START …… Engine running position. Upon release of key, the switch automatically returns to ON.

If the coolant temperature is too low, rotate counter-clockwise the key, hold for 10~15s, and then release before start.

Rotate the key to ON and then to START to start the engine.

JOYSTICKS AND PEDALS

Safety lock handle

WARNING

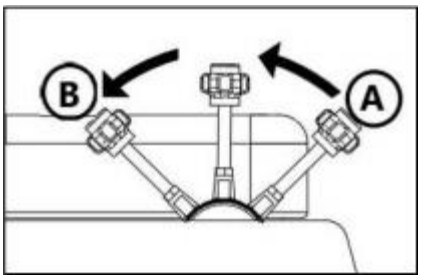

- Before standing up from the driver seat to adjust the operator's seat, lower the working device to the ground, lift up the safety lock handle to lock it, and stop the engine. When the safety lock handle is lowered down (Unlocked), the accidental touch of any joystick will result in sudden movement of machine and cause serious injuries or deaths.
- Please be noted that, even if the safety lock handle is placed at locking position, the bulldozing blade, boom, and auxiliary hydraulic controls can't be locked. Do not touch such controls accidentally.
- While lifting up or lowering down the safety lock handle, take cautions not to touch any joystick
- Before leaving the driver seat, lower the working device onto the ground, lift up the safety lock handle to locking position, and stop the engine.

Meanwhile, ensure to withdraw the key, close the doors and hoods, and carry the key with you and then preserve it in a designated place.

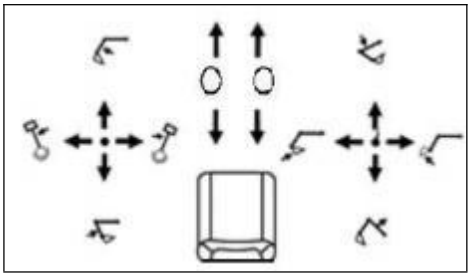

This device is functioned to lock the operations of bucket working device and machine slewing. When pushing the lever forward, except for the walking lever, the other levers cannot work

Accelerator joystick

Used to control engine speed. (A)...low idle

(B)...Maximum speed

Joysticks

WARNING

- Before starting operations, please carefully check and confirm the joystick mode to be used.
- The descriptions in this manual use the ISO mode of machine.

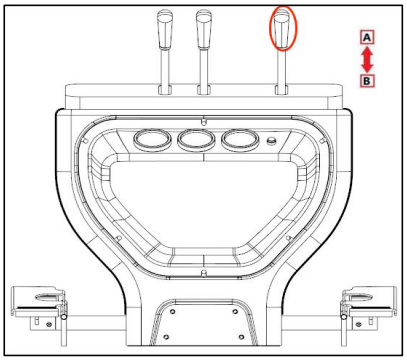

Control Mode

Bulldozing blade joystick

Use this joystick to operate the bulldozing blade. (A) … Lower the bulldozing blade.

(B)… .Lift the bulldozing blade.

Traveling Joystick

WARNING

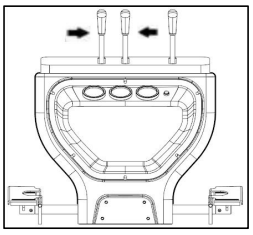

● Before operating the traveling joystick, ensure that the bulldozing blade is in front of the driver seat. Please bear in mind that the operation direction of the traveling joystick with bulldozing blade behind the driver seat is reverse to that with bulldozing blade in front of driver seat.

Use these two levers to move forward or backward and change direction.

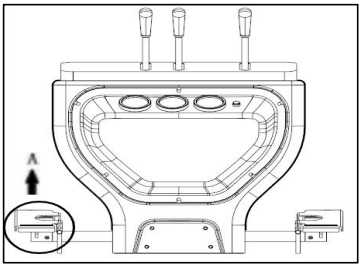

Auxiliary hydraulic pedal

This right pedal is used for hammer operation.

Note: Make sure you have and correctly installed the breaker device. Step on the pedal forward, the breaker will start to work, release the pedal, and the breaker will stop.

Side swing control work device left and right skewing.

A. The working device is set off to the left.

B. The working device is deflection to the right.

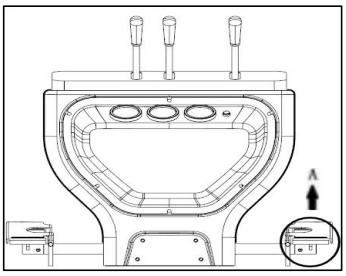

Pedal lock

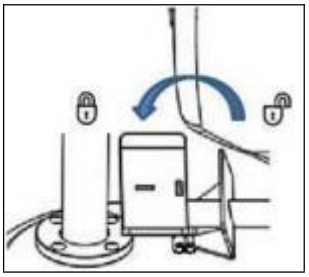

When the pedal is not in use, hold the pedal cover at locking position. If it's not locked, the accidental depressing of pedal will probably result in accidents.

● Flip the cover to the outside to lock the foot pedal so that it cannot be stepped on.

● Flip the cover to the inside to expose the pedals, and then you can step on the pedals.

ACCESSORY

Auxiliary hydraulic pipeline (If installed)

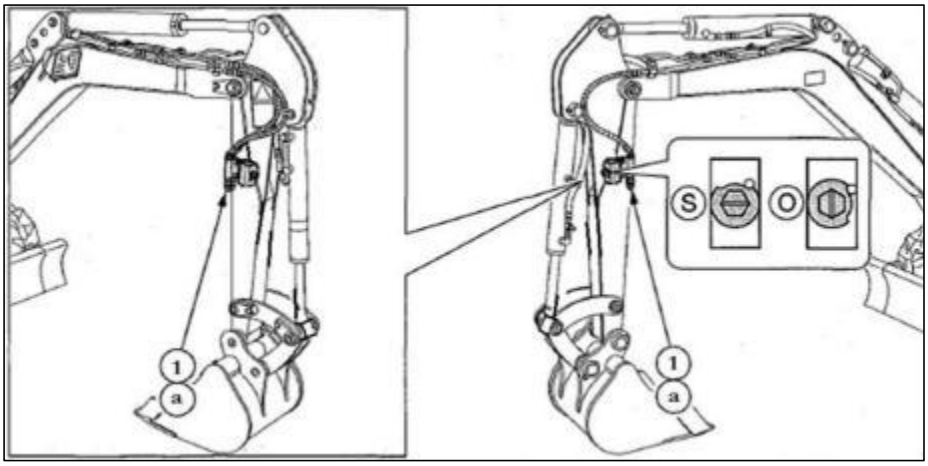

WARNING

Disconnecting the pipelines before the pressure relief of hydraulic system will probably result in out-spray of hydraulic oil.

● After the stop of engine, immediately press all auxiliary hydraulic pedals and 2nd auxiliary switch for several times to relieve the pressure in the auxiliary hydraulic circuit.

● Slowly loosen the bleeding plug to relieve the internal pressure of hydraulic oil tank.

● While disconnecting hoses, stand on one side and loosen slowly. Slowly relieve the internal pressure before disassembling. These pipelines transport the hydraulic oil needed to operate hydraulic breakers or other working devices.

(1) ... Auxiliary hydraulic pipeline Shut-off valve

(S): Close

(0): Open

Connection of Hydraulic Circuits

To connect the attachment hydraulic pipeline, please operate as per following procedure:

1. Relieve the residual pressure from system and then close the shutoff valve.
2. Take out the plug.
3. Connect the attachment hydraulic pipes to ports (a). While installing a hydraulic breaking hammer, connect the oil inlet port to port (a).
4. Open the shutoff valve. While installing a hydraulic breaking hammer, open the selector valve (1).
5. After connections, fully bleed the air from hydraulic pipes.

a. Start the engine and run at low idling speed under no-load condition for 10min.

b. During the running of engine at low idling speed, operate the hydraulic auxiliary switch repeatedly (for approximately 10 times) to bleed the air from hydraulic pipes.

c. Stop the engine and wait for at least 5min, till the air bubbles overflow from the hydraulic oil in the oil tank. Important: If applicable, follow the attachment manufacturer's procedure to bleed the air.

6. Check for presence of oil leakage.

Disconnection of Hydraulic Circuits

1. Relieve the residual pressure from system and then close the shutoff valve.
2. Disconnect the pipelines from ports.
3. Install the plug.

Relieve residual pressure

After using the auxiliary hydraulic circuit, there is residual pressure in the circuit. This is called residual pressure. Before disconnecting the pipeline, release the residual pressure.

OPERATIONS

BEFORE START OF OPERATIONS

Getting on/off machine

● Do not jump on or off the machine. Do not attempt to get on or off a moving machine.

● While getting on/off the footplates, hold the handrails to support your body weight and maintain three-point balance posture (Hands and feet) for your body.

● Do not use safety lock handle or any joystick as handrail.

Walk-Around Checking

Before the first start of engine each day, fulfill one walk-around checking.

Daily Routine Checking

Before the first start of engine each day, fulfill one walk-around checking. Refer to page from 65 to 67 “Maintenance, daily routine inspection”.

START AND STOP OF ENGINE

1. Adjust the seat to comfortable operating position.
2. Check and ensure that the safety lock handle is at locking position.

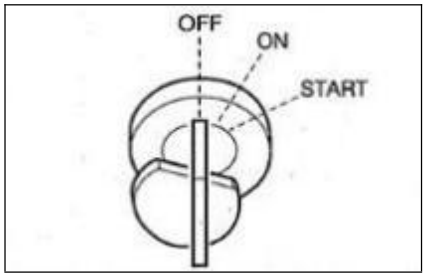

3. Check and ensure that all joysticks and pedals are in neutral position.

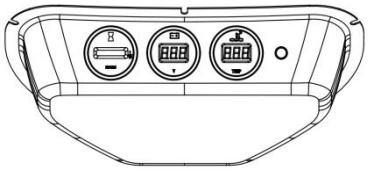

4. Insert the key into starter switch, rotate to ON position, and then check as below:

● All warning lamps turn on for 1s and the warning tone is issued for 2s. The instruments start working.

● Press the lamp switch and check and ensure that the boom lamp turn on.

If a lamp fail to turn on or a warning lamp fails to sound, the lamp bulb or wire is Probably damaged.

Start of Engine

WARNING

- Keep all personnel away from working zone.
- Sound the horn to alert the personnel around machine.

Important: Do not run the starter motor continuously for >15s. If the engine fails to start, wait for 60s and then attempt to restart the engine.

Important: If the engine stops due to shortage of fuel, please add fuel, rotate the key to ON for 60s, and then rotate it to START position.

Running the starter motor for a long time before the supply of sufficient fuel will cause start failure of starter motor.

Normal Start

1. Pull the accelerator joystick to neutral position.
2. Rotate the starter key to START position to start the engine.
3. After the engine is started, release the key. The key will automatically return to ON position.
4. Check and ensure that all warning lamps are already off.
5. Return the accelerator joystick

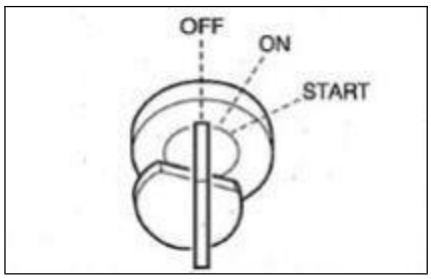

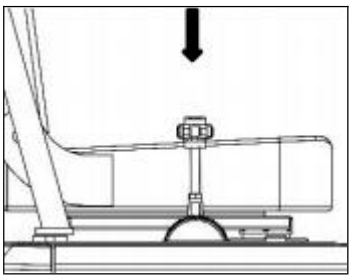

OPERATIONS OF MACHINE

Joystick Mode (ISO Mode)

- Before starting operations, please carefully check and confirm the joystick mode to be used.
- The descriptions in this manual use the ISO mode of machine.

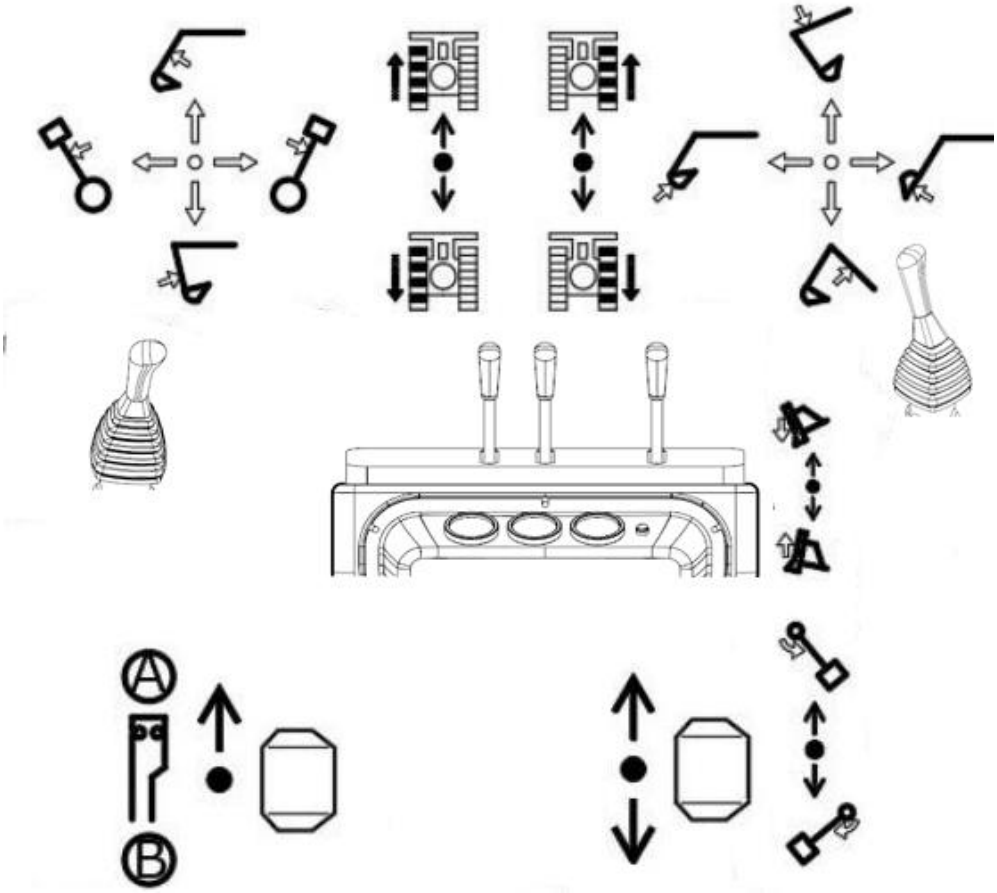

	Drive leftward		Drive rightward		Extending track
	Back up to left		Back up to right		Retracting track
	Extend arm		Lower boom		Safety lock locked
	Retract arm		Lift boom		Safety lock unlocked
	Slew leftward upper frame		Load bucket		Auxiliary oil circuit work/stop
	Slew rightward upper frame		Dump bucket		
	Swing leftward the boom		Lower bulldozing blade		The working device swings from side to side
	Swing rightward the boom		Lift bulldozing blade		

Operations of Traveling Joystick

WARNING

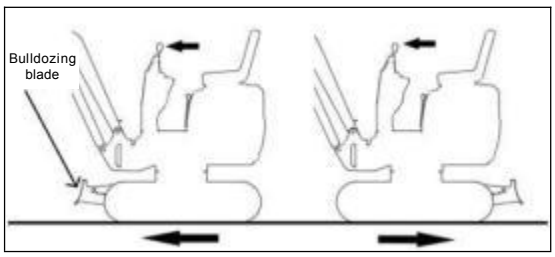

● Do not allow any person to access the turning radius or path of machine.

● There are blind zones behind the machine. To reverse the machine, if necessary, slew the cab to check the safety and ensure there is no person behind the machine.

● Before operating the traveling joystick, ensure that the bulldozing blade is in front of the driver seat. Please bear in mind that the operation direction of the traveling joystick with bulldozing blade behind the driver seat is reverse to that with bulldozing blade in front of driver seat.

● Remove all obstacles from the path of machine. Move the machine back and forth

1. Pull the accelerator joystick to increase the engine speed.
2. Fully lower the safety lock lever to release the lock.
3. Retract the bucket and lower to 30~40cm off the ground.
4. Lift the bulldozing blade.
5. Operate the traveling joystick as per following procedure.

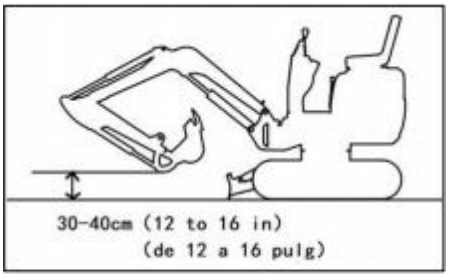

When the bulldozing blade is in the front of cab:

To drive forward: Pull forward the joystick. To drive backward: Pull backward the joystick.

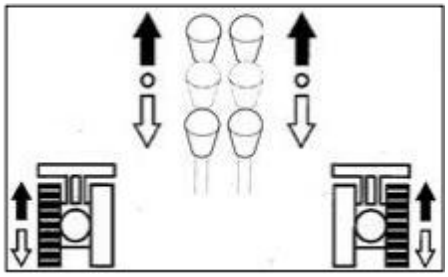

When the bulldozing blade is in the rear of cab: To drive forward: Pull backward the joystick.

To drive backward: Pull forward the joystick.

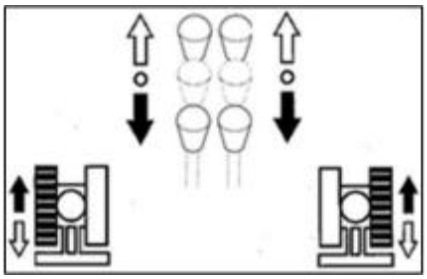

Pivot Steering

Turn left when parking:

To turn forward left: push the right traveling lever;

To turn back left: pull the right traveling lever.

Turn right when parking, same operating to operate the left traveling lever.

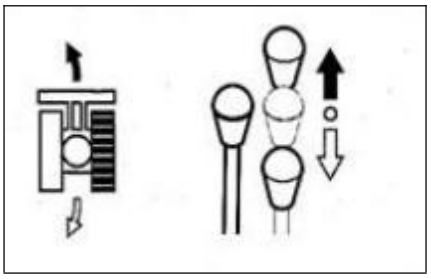

Turn left during traveling:

To turn left during traveling forward:

Place the left joystick to neutral position. To turn left when traveling backward: Place the left joystick to neutral position.

To turn right during traveling, operate the right traveling lever by same operation method of left traveling lever.

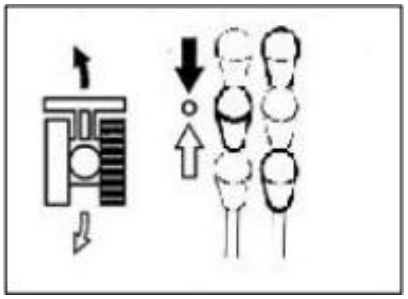

Rotate in situ

Rotate left in situ: pull left traveling lever backward and push the right traveling lever forward.

Rotate right in situ: pull right traveling lever backward and push the left traveling lever forward.

Parking

WARNING

- Park the machine on a level, solid, and safe ground. Set the parking device. If it's necessary to park the machine on a slope, block the track by wedges to prevent movement of machine.
- When the safety lock handle is unlocked, the accidental touch of any joystick will result in sudden movement of machine and cause serious injuries or deaths.
- Please be noted that, even if the safety lock handle is placed at locking position, the bulldozing blade, boom, and auxiliary hydraulic controls can't be locked.

Do not touch such controls accidentally.

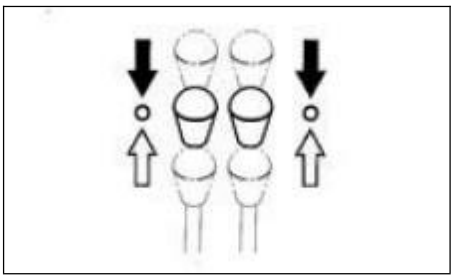

CAUTION

Do not stop the machine hastily, unless in event of emergency.

Stop the machine at the optimal timing whenever possible.

Slowly place the left and right traveling levers to neutral position.

Stop the machine

TRANSPORTATION

LOADING AND UNLOADING

WARNING

The machine will probably roll over or fall off during unloading. Ensure to take the following safety measures:

● Select a solid and level ground and keep a sufficient spacing from the road curb.

● Fix the ramps of sufficient strength and dimensions to the cargo body of truck. The inclination of the ramps shall not exceed 15°. If the ramps deflect downward excessively, please support the ramps by supports or cushion blocks.

● Do not load or unload the machine by working device. Otherwise, it will probably result in rollover or falloff of machine.

● Keep the truck cargo body and the ramps clean without oil, sand, ice/snow, or other impurity, in order to prevent the side slip of machine. Clean the tracks.

● Block the wheels of transport truck by wedges to prevent movement.

● While loading or unloading the machine, drive the machine slowly in 1st gear (low speed) as per the signals of the signaler.

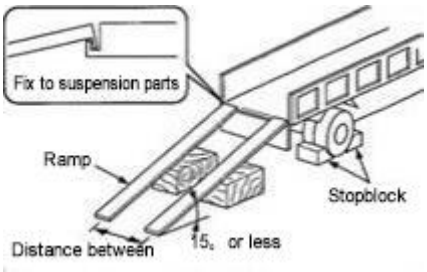

● Do not change direction on ramps.

● Do not slew/swing on ramps. Otherwise the machine will probably roll over.

● Slewing/swinging the machine on the cargo body of truck will probably result in unstable legs of machine. Therefore, operate slowly.

● If possible, lock the cab doors after loading. Otherwise the cab doors will probably open during the transport.

● Plug securely the tracks by wedges and then fix the machine to the truck cargo body securely by ropes or chains.

During the loading or unloading of machine, please ensure to use ramps or platform and abide by following procedures.

1. Securely apply the parking device of transport truck and block the wheels by wedges.
2. Place the ramps securely onto the truck cargo body. The inclination of the ramps shall not exceed 15°.
3. Align the center of truck cargo body with the center of machine and align the center of ramps with center of tracks.
4. Ensure that the bulldozing blade will not touch the ramps.

5. Lower the bucket working device as low as possible and take cautions not to impact it with the transport truck.

6. Reduce engine speed.

7. According to the signaler's signals, drive the machine straightly up or down along the ramps in 1st gear (low speed).

8. Load the machine to designated position of transport truck.

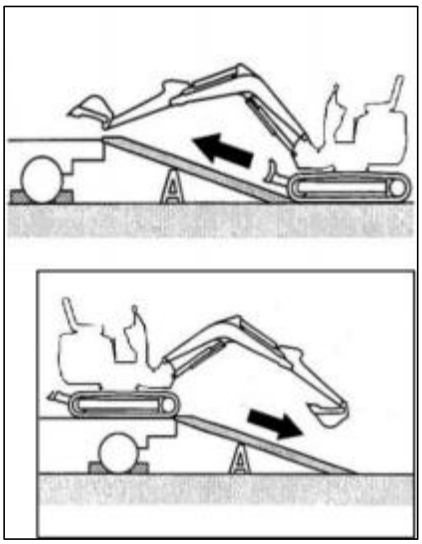

MAINTENANCE

OVERVIEW

Maintenance Overview

To maintain the good status and long-term serviceability of the machine, please fulfill the checking and maintenance correctly and safely abide by the procedures recommended by this manual.

Based on the total operating time of the machine, the checking and maintenance items can be divided into several groups: Every 10h (Walk-around checking and daily routine checking), every 50h, and every 250h. Please refer to the reading of hour meter to determine the checking and maintenance timing.

The items for which the checking and maintenance intervals can't be determined are listed in column "As necessary".

When the machine is operated in extremely severe environment (Dusty or high temperature environment), fulfill the checking and maintenance ahead of the periods specified by maintenance schedule.

MAINTENANCE PARTS REPLACE PERIODIC CHART

ITEM	NEW EXCAVATOR WORKING HOURS							SUBSEQUENT REPLACE PERIOD	OIL GRADE
	50	500	1000	1500	2000	2500	3000		
Engine oil	✓	✓	✓	✓	✓	✓	✓	500 hours	Ci4 15W-40
Engine oil filter	✓	✓	✓	✓	✓	✓	✓	500 hours	
Engine diesel prefilter	✓	✓	✓	✓	✓	✓	✓	500 hours	
Engine diesel filter	✓	✓	✓	✓	✓	✓	✓	500 hours	
Oil-water Separator		✓	✓	✓	✓	✓	✓	500 hours	
Engine air filter		✓	✓	✓	✓	✓	✓	500 hours	
Traveling motor gear oil			✓		✓		✓	1000 hours	
Slewing motor gear oil			✓		✓		✓	1000 hours	
Hydraulic oil					✓			2000 hours	
Pilot filter			✓		✓		✓	1000 hours	
Return oil filter			✓		✓		✓	1000 hours	
Oil-intake filter					✓			2000 hours	

NOTE: 1.Mark the "✓" is need to replace;
2.When the excavator is equipped with hydraulic breaker, the replace period of hydraulic oil and hydraulic oil filter should be reduced by half.

Maintenance Precautions

Do not fulfill any other checking or maintenance item not listed in this manual.

For the items not listed in this manual, please ask your sales or service dealer for help.

Keeping Machine Clean

- Clean the machine before checking and maintenance. Keep the machine clean.
- Stop the engine before cleaning the machine. Cover the electric parts against water ingress. The water ingress into the electric parts will probably result in short- circuit or malfunction. Do not clean the battery, electronic control units, sensors, connector, or operating room by water or steam.

Fuel, Lubricating Oils, and Greases

- Select fuel, lubricating oils, and greases as per the “Fuel and Lubricant Table”.
- Use the water-free fuel, lubricating oil, and grease. Take cautions to eliminate the ingress of dusts during replacement or filling of fuel, lubricating oil, and grease.
- Store the fuel, lubricating oil, and grease in designated location and guard against the ingress of water and dusts.

Precautions for Refueling

- If the fuel filler port is installed with a filter screen, do not remove the filter screen during refueling.
- Please ensure to tighten the fuel tank cap after refueling.
- The refueled volume shall not exceed the designated fuel volume.

No Cleaning of Engine Parts by Fuel

It’s prohibited to clean engine parts by fuel. Use non-inflammable detergent.

Guard against Ingress of Dusts

The installation and disassembling of parts shall be operated in a dust-free place. Clean the working area and clean the parts to guard against ingress of dusts.

Cleaning of Mounting Surfaces

Keep clean the contact surface of parts during the installation and disassembling. If the sealing grooves of the contact surfaces are damaged, please contact your sales or service dealer for repairs or breakup.

SERVICE DATA

Fuel and Lubricant Table

Please refer to following table to select appropriate fuel, lubricating oil, and grease based on the temperature.

- Regardless of the specified periods, replace the oil when the oil is too dirty or already deteriorated.
- Never mix the oils of different trademarks while adding fuel/oil. To replace with fuel/oil of other trademark, please replace completely.

Fuel

Specified fuel

The diesel shall meet the following specification. This table lists some diesel specifications available in the world.

Diesel specification	Region	Diesel specifications	Region
GB252	China	JIS K2204, grade 2	Japan
ASTM D975 No. 1-D, S15 No. 2 -D, S15	USA Canada	ISO 8217DMX	Worldwide
Bio-diesel Bio-diesel mixture B5 ASTM D6751, D7467			
EN590 : 2009	EU	BS2869-A1 or A2	UK
Bio-diesel Bio-diesel mixture B5 EN14214, EN590			

Fuel tank	Diesel	To maintain the performance and life of engine, please always use clean and high-quality fuel. ● To prevent freezing in cold weathers, please choose diesel still suitable when the actual temperature is less by at least 12℃ than the expected minimum outside temperature. ● Please use diesel with cetacean number at 45 or higher. During the operations in low temperature or high altitude regions, use fuel of higher cetacean number. ● Use fuel with sulfur content (volume ratio) at <0.5%. Use ultra-low sulfur fuel especially in U.S. and Canada. The use of fuel with high sulfur content can probably result in sulfur acid corrosion in engine cylinders. ● Do not mix the diesel with kerosene, used engine oil, or residual fuel. It's prohibited to use kerosene. ● The low quality fuel will reduce the engine performance and/or damage the engine. ● It's not recommended to use fuel additives. Some fuel additives will deteriorate the engine performances

		Safety measure for use of bio-diesel The warranty regulation of the engine manufacturer is void for the engine using disqualified or deteriorated bio-diesel.

Lubricant

Position	**Type**	**Type depending on temperature** **-20 -10 0 10 20 30 40℃**	**Replacement period**
Oil pump	Diesel engine fuel API: grade CD ACEA:E-3,E-4 or E-5	**SAE 10W-30** **SAE 15W-40**	First 50h * Afterwards every 250h
Hydraulic oil tank	Anti-wear hydraulic oil	**SO VG32** **ISO VG46** **ISO VG68**	Every 2000h ***
Cooling system	Coolant (Water + coolant) ** SAE: J814C or J1034	**50% coolant mixture** **30% coolant mixture**	Every 1000h
Traveling reducer gear	Gearbox API: GL-4	SAE 90	First 250h * Afterwards every 1000h
Slewing motor gear	Lithium-base grease EP-2 MLGI 2#		Every 50h
Slewing bearing			Every 50h
Working device			Daily or every 10h
Arm		--	As necessary

Periodical Replacement of Hydraulic Oil

With installed hydraulic breaking hammer, the hydraulic oil deteriorates faster than the common digging operations. Ensure to replace the hydraulic oil and oil return filter element.

● The failure to replace timely will result in damage of machine and breaking hammer hydraulic system. To prolong the lives of hydraulic devices, please timely replace the hydraulic oil and oil return filter element as per the table below.

● During the replacement of hydraulic oil, clean the oil suction filter screen.

Replacement period (Hour)

Item	Hydraulic oil	Filter element
1st time	--	25
2nd time	--	100
Periodic	1200(600)	200

By taking the breaking hammer operating ratio of 100% for instance. Refer to “Hydraulic Breaking Hammer” in page 91 for details.

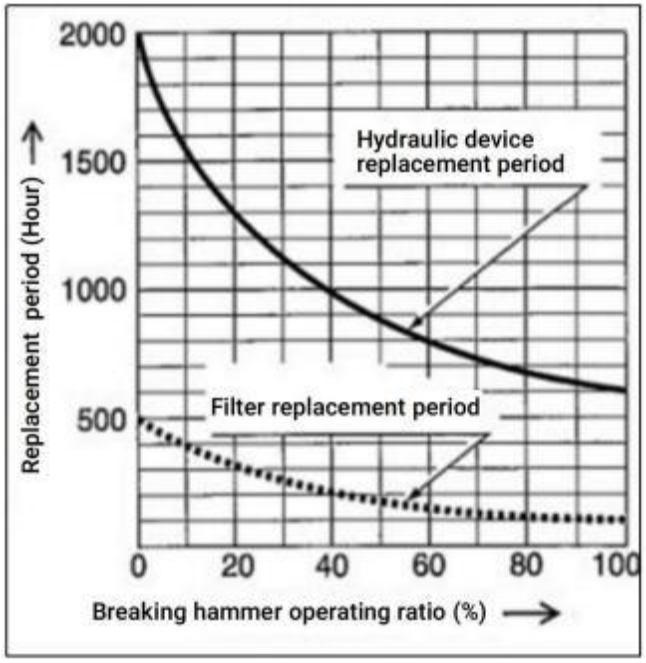

( ): For the use of common anti-wear

List of Wearing Parts

Periodically replace the wearing parts, including filters and filter elements, as per the table below.

System	Item	Part name	Replacement period
Hydraulic system	Ventilator		Every 1000h
Engine lubrication system	Engine oil filter	Filter cartridge	Replace after first 50 hours, then every 250 hours
Fuel system	Fuel filter	Filter cartridge	Every 250h
Air filter system	Air filter	Primary (Outer) filter element	Every 1,000h or 6 cleaning cycles (Whichever comes first)
		Secondary (Inner) filter element	At replacement of primary filter element

CRITICAL SAFETY PARTS

To operate the machine safely, please fulfill the periodical checking and maintenance. The following critical safety parts shall be replaced periodically to improve safety.These parts can cause serious injuries or fire accident if they are damaged.

List of Critical Safety Parts

<table>
<tr><th colspan="2">Vehicle body</th><th>Periodically replaced critical safety part</th><th>Replacement period</th></tr>
<tr><td colspan="2" rowspan="2">Fuel system</td><td>Fuel pipes</td><td rowspan="17">Every 2 years</td></tr>
<tr><td>Packing on fuel tank cover</td></tr>
<tr><td colspan="2">Heater</td><td>Heater hoses</td></tr>
<tr><td colspan="2">Cooling system</td><td>Rubber hoses</td></tr>
<tr><td rowspan="12">Hydraulic system</td><td rowspan="4">Main machine</td><td>Hydraulic pipe (Pump outlet)</td></tr>
<tr><td>Hydraulic pipe (Pump oil suction port)</td></tr>
<tr><td>Hydraulic pipe (Slewing motor)</td></tr>
<tr><td>Hydraulic pipe (Traveling motor)</td></tr>
<tr><td rowspan="8">Working device</td><td>Hydraulic pipe (Boom cylinder pipeline)</td></tr>
<tr><td>Hydraulic pipe (Bucket arm cylinder pipeline)</td></tr>
<tr><td>Hydraulic pipe (Bucket cylinder pipeline)</td></tr>
<tr><td>Hydraulic pipe (Swing cylinder)</td></tr>
<tr><td>Hydraulic pipe (Bulldozing blade cylinder)</td></tr>
<tr><td>Hydraulic pipe (Span cylinder)</td></tr>
<tr><td>Hydraulic pipe (Pilot valve)</td></tr>
<tr><td>Hydraulic pipe (Auxiliary pipeline)</td></tr>
<tr><td colspan="2" rowspan="2"></td><td>Seat Belt</td><td rowspan="2">Every 3 years</td></tr>
<tr><td>Anti skid plate</td></tr>
</table>

The materials of the above-mentioned critical safety parts will deteriorate along with time to cause wear or deteriorated performance. It’s difficult to determine the deterioration extent during periodical checking. Therefore, such parts shall be replaced with new ones to guarantee stable performance, even if such parts are still working well. Please be noted that, regardless of the replacement schedule, any part with wear symptom must be replaced immediately. Upon detection of any deformed or cracked pipe clamp, immediately replace it together with hose. Please consult with your sales or service dealer for the replacement of safety parts.

Except the critical safety parts, check and tighten the hydraulic pipes and when necessary replace. During the replacement of hydraulic pipes, replace the O-ring and seal ring as well.
Check the fuel and hydraulic pipes as per the schedule specified by the following table. Refer to "Maintenance".

Checking type	Checking item
Daily routine checking	Leakage of hydraulic or fuel pipe connector
Monthly checking	Leakage of hydraulic or fuel pipe connector Damage (Cracking, wear, and tear) of hydraulic or fuel pipe
Yearly checking	Leakage of hydraulic or fuel pipe connector Aging, distortion, and damage (Cracking, wear, and tear) of hydraulic or fuel pipe and/or status of hose in contact with other machine parts

Opening of engine hood and machine hood for checking

1. Check for presence of branches, leaves, oil, and other inflammable around the engine and battery.
2. Check for presence of lubricating oil and coolant leakages around the engine.
3. Check hydraulic oil pipes, hydraulic devices, hoses, and connectors for oil leakage.

Walk-around checking of machine

1. Check lamps for presence of dusts and damages and check lamp bulbs for burnout.
2. Check hydraulic accessories and hoses for damage.
3. Check bucket, bucket teeth, and side teeth for wear, damage, and looseness.
4. Check hook, anti-slip stop block, and hook seat on bucket for presence of damage. (Optional)
5. Check handrails, footplates, and anti-slip surfaces for damage and check for any loose bolt.
6. Check tracks and track shoes for presence of slip, check track carrier rollers, idling device, and sprocket for presence of damage and wear, and check for loose bolt.
7. Check traveling motor for oil leakage.
8. Check shelter and guard plates for damage and check for loose nuts and bolts.
9. Check exterior and interior rear view mirrors for contamination and damage and when necessary adjust.
10. Check labels for presence of dusts and damage.

Checking in Driver Seat

1. Check seat and seat belt for presence of dust and damage.
2. Check driver seat for presence of dust, oil dirt, and other inflammable.
3. Check monitor, electric devices, and switches for oil dirt, dust, and damage.

TROUBLESHOOTING

ENGINE OVERHEATING

WARNING

● If the steam overflows from the engine, do not open the engine hood or machine hood. The steam or hot water will probably spray out to cause scalding.

● Do not disassemble the radiator cap or drainage plug when the coolant is hot. Stop the engine, wait for the engine and radiator to cool down, and then slowly loosen the radiator cap to relieve the internal pressure.

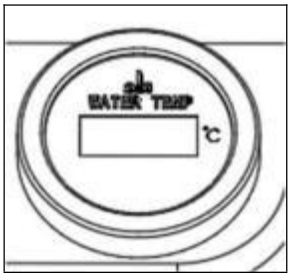

● Please stop the engine and wait for the machine to cool down before maintenance.

The following symptoms indicate overheating.

● Engine water temperature should be <105℃

● Steam came out of the engine room.

NO BATTERY POWER

The following symptoms indicate no battery power.

● No rotation of starter motor or start failure of engine.

● Low volume of horn.

Remedy procedure

Start the engine by the booster battery on other machine (booster machine) and jumper cable.

WARNING

● To start the engine by jumper cable, ensure to connect the cable by correct procedure. The improper use of jumper cable will result in battery explosion or unexpected machine motions.

• The booster machine and the machine with depleted battery are prohibited for mutual contact.

• The positive (+) and negative (-) clamps of the jumper cable are prohibited for mutual contact.

• During connection, firstly connect the jumper cable to positive (+) terminal. During disconnection, firstly disconnect the cable from negative (-) terminal.

• Connect the last clamp of jumper cable to a point as far as possible from the battery.

Cable to Start Engine.

Important: The jumper cable and clamps in use shall be suitable to the battery capacity. Do not use any damaged or corroded jumper cable or clamp.

Important: Ensure the same capacity for the battery on the rescue machine and the battery on malfunctioned machine.

Important: Ensure to connect the cable clamps securely.

Connection of Jumper Cable

Important: Place the starter keys of both rescue machine and malfunctioned machine to OFF.

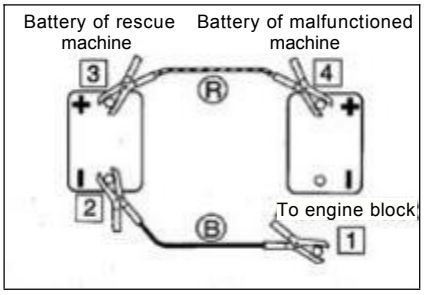

1. Connect a clamp of jumper cable (R) to the positive (+) pole of malfunctioned machine.
2. Connect the other jumper cable clamp (R) to the booster (+).
3. Connect the jumper cable clamp (B) to the charger (-).

● Always wear goggles while using jumper

4. Connect the other clamp of jumper cable (B) to the engine support of the

malfunctioned machine. Connect the clamp to a point as far as possible from the battery.

After Start of Engine

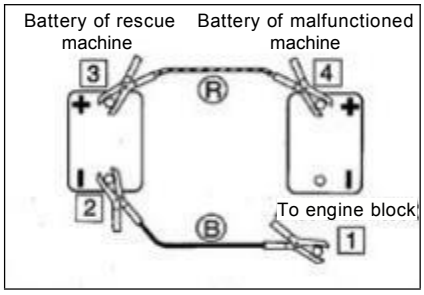

1. Check and ensure that the wire clamps are already connected securely to various terminals.
2. Start the engine of rescue machine and run it at high speed.
3. Start the engine of the malfunctioned machine.

Disconnection of Jumper Cable

After the successful start of the engine of malfunctioned machine, disconnect the jumper cable in reverse sequence of the connection procedure.

1. Disconnect the clamp of jumper cable (B) from the engine support of malfunctioned machine.
2. Disconnect the other jumper cable (B) from the charger (-).
3. Disconnect the jumper cable (R) clamp from the charger (+).
4. Disconnect the jumper cable clamp (R) from the uncharged machine (+).

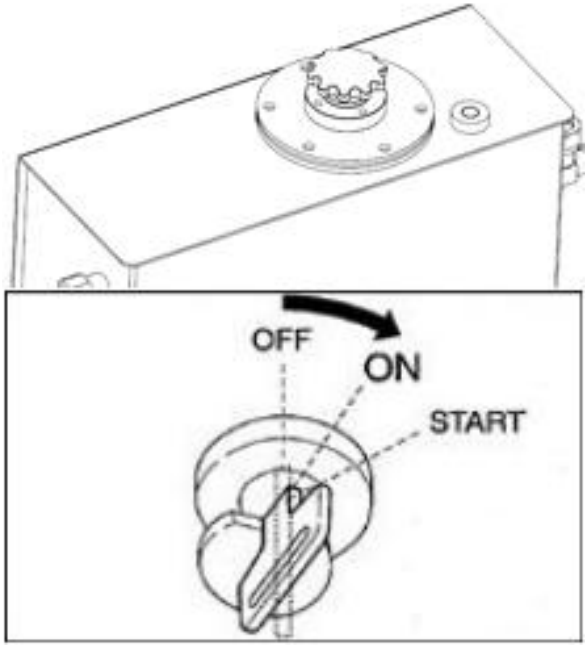

Recharging

Please ask your sales or service dealer to recharge the depleted battery.

RESTART AFTER REFUELING

Air exhausting from Fuel System

Important: Do not rotate the engine by starter motor to get ready the fuel system. This will probably cause overheating of starter motor to damage coil, pinion, and/or ring gear.

Important: If the engine stops due to shortage of fuel, please add fuel, rotate the key to ON for 60s, and then rotate it to START position. Running the starter motor for a long time before the supply of sufficient fuel will cause start failure of starter.

1. Add fuel.
2. Turn the starter key to the ON position and hold it for about 60 seconds.

Note: The air content in the fuel system will cause start failure or other problems of engine. Ensure to exhaust when the fuel tank is empty or the fuel system contains air.

FLASHING OF WARNING LAMPS

If a warning tone is heard or a warning lamp starts to flash during operations, park the machine in a safe place and take the following remedy measures.

Warning lamp	Lamp name	Cause and solution
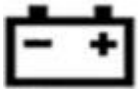	Charging warning lamp	There is a problem with charging. If the light continues to flash after maintenance, there may be a problem with the charger. If you need help, please consult your sales or service agent.
	Engine oil pressure indicator lamp	The engine lubrication system is internally malfunctioned. Check the engine oil level. If this lamp flashes when the oil level is normal or still flashes after adding of oil, please consult with our service team. “Checking and adding of engine oil”.

PARAMETERS

BASIC PARAMETERS

	Technical parameters	Unit	HY14G
Operating weight		kg	1050
Bucket capacity		m3	0.02
Type of working device			Backhoe
Engine	Model		Kubota D722
	Displacement	L	0.719
	Rated output power/speed	kw/r/min	10.2/2500
	Maximum torque/rotating speed	N.m/r/min	42.9/2000
Speed	Maximum traveling speed (High/low)	km/h	2
	Slewing speed	rpm	8
	Maximum grade ability		30°
Track sub assembly	Ground pressure	kPa/cm²	0.3
	Material		Rubber
	Tension control type		Mechanical tightening
Type of pump			gear pump
Fuel/oil/fluid pressure and capacity	Working pressure	Mpa	16
	Flow	(L/min)	17.6
	Hydraulic oil tank capacity	(L)	15
	Fuel tank capacity	(L)	16

	Technical parameters	Unit	HY14D
Operating weight		kg	1005
Bucket capacity		m3	0.02
Type of working device			Backhoe
Engine	Model		XR2100
	Displacement	CC	420
	Rated output power/speed	kw/r/min	13.5/3600
Speed	Maximum traveling speed (High/low)	km/h	1.2
	Slewing speed	rpm	9

	Maximum grade ability		30°
Track sub assembly	Ground pressure	kPa/㎠	0.3
	Material		Rubber
	Tension control type		Mechanical tightening
Type of pump			gear pump
Fuel/oil/fluid pressure and capacity	Working pressure	Mpa	16
	Flow	(L/min)	17.6
	Hydraulic oil tank capacity	(L)	15
	Fuel tank capacity	(L)	6.6

	Technical parameters	**Unit**	HY14C
Operating weight		kg	934
Bucket capacity		m3	0.02
Type of working device			Backhoe
Engine	Model		R420
	Displacement	ml	420
	Rated output power/speed	kw/r/min	8.5/3600
Speed	Maximum traveling speed (High/low)	km/h	1.2
	Slewing speed	rpm	9
	Maximum grade ability		30°
Track sub assembly	Ground pressure	kPa/㎠	0.3
	Material		Rubber
	Tension control type		Mechanical tightening
Type of pump			gear pump
Fuel/oil/fluid pressure and capacity	Working pressure	Mpa	16
	Flow	(L/min)	17.6
	Hydraulic oil tank capacity	(L)	15
	Fuel tank capacity	(L)	6.6

	Technical parameters	**Unit**	HY14F
Operating weight		kg	1005
Bucket capacity		m3	0.02
Type of working device			Backhoe
Engine	Model		XR2100
	Displacement	CC	420

	Rated output power/speed	kw/r/min	13.5/3600
Speed	Maximum traveling speed (High/low)	km/h	1.2
	Slewing speed	rpm	9
	Maximum grade ability		30°
Track sub assembly	Ground pressure	kPa/㎠	0.3
	Material		Rubber
	Tension control type		Mechanical tightening
Type of pump			gear pump
Fuel/oil/fluid pressure and capacity	Working pressure	Mpa	16
	Flow	(L/min)	22+11
	Hydraulic oil tank capacity	(L)	22
	Fuel tank capacity	(L)	6.6

All ratings of the machine are obtained when the machine is operating on a solid horizontal support surface. If the working environment conditions of the machine differ from the above-mentioned reference conditions (Such as the operations on uneven ground and slope), the operator shall take these conditions into consideration.

OVERALL DIMENSIONS OF MACHINE

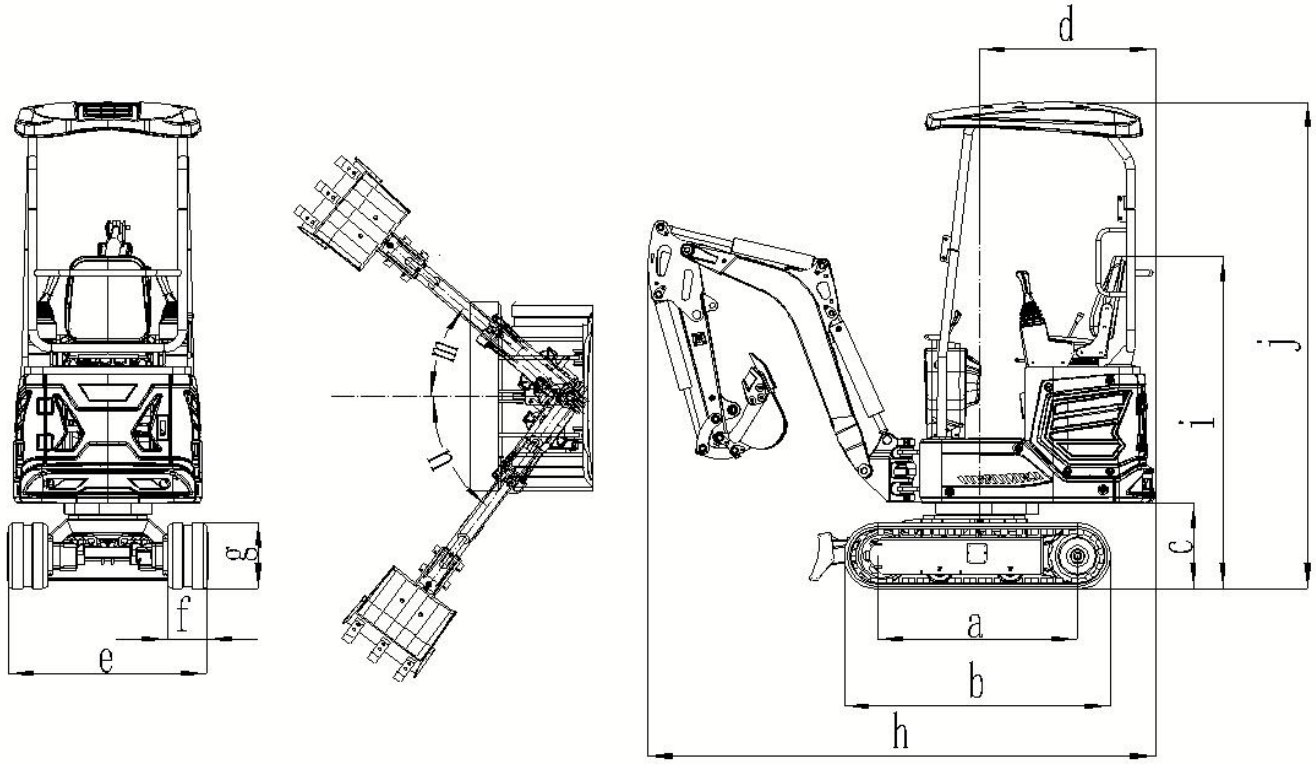

	Overall dimensions	Unit: mm		Overall dimensions	Unit: mm
a	Wheel track	910	h	Transport length	2350/2870
b	Overall length of crawler	1235	i	Ground clearance of seat	1560
c	Ground clearance of platform	400	j	Overall height	2270
d	Tail slewing radius of platform	830	m	Boom slewing - right	40°
e	Chassis width	940	n	Boom slewing – left	53°
f	Track width	180	g	Track height	320
g	Track height	320			

OPERATING RANGE

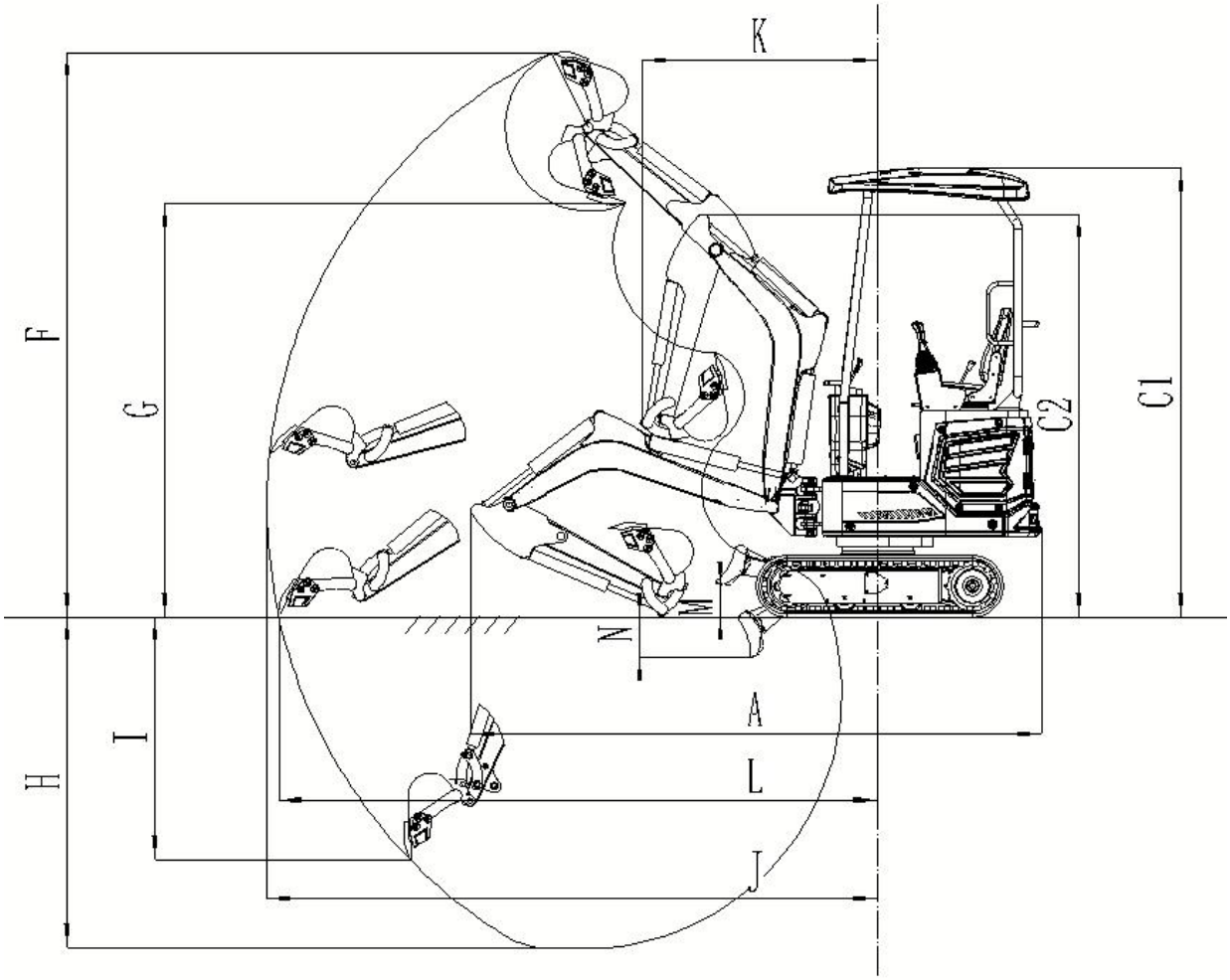

	Working range	Unit: mm
L	Ground maximum digging radius	3020
J	Maximum digging radius	3080
H	Maximum digging depth	1670
F	Maximum digging height	2840
G	Maximum Dump height	2080
I	Maximum vertical digging depth	1610
K	Minimum slewing radius	1190
M	Maximum lifting height of bulldozing blade	150
N	Maximum digging depth of bulldozing blade	190

ACCESSORIES

Precautions for Operations

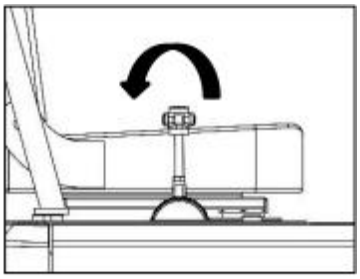

- Start the engine and run at 75% of maximum speed.

- Perform the crushing operation by placing the hammer head perpendicular to the working face.

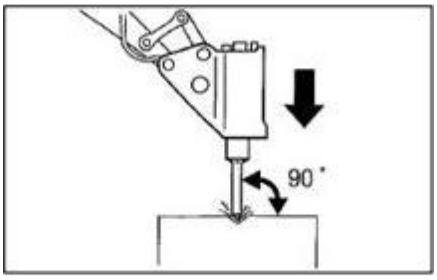

- During the crushing operations, appropriately aim the hammer head at the object to be crushed and avoid the air impact.

- Do not pry by hammer head or pry during breaking.

- Do not move the hammer head during crushing.

- Do not impact one same surface continuously for >30s.
- Do not crush when the cylinder is fully extended or retracted (at travel end). Reserve at least 50mm travel.

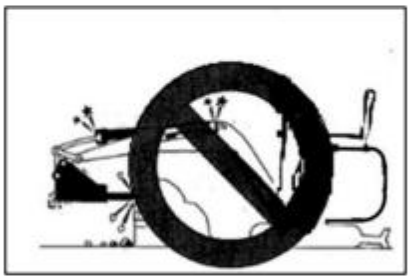

- Do not crush when the bucket arm is perpendicular to the ground.
- Do not crush any object to be impacted by the gravity drop of breaking hammer.
- Do not use the breaking hammer to move any object or rock to be crushed.

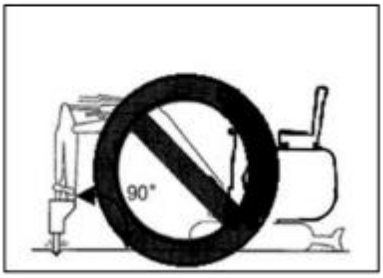

- Slew the machine occasionally to cool down the engine.

- In event of abnormal vibration of hydraulic pipes, the nitrogen in the accumulator is probably leaking. Please check as soon as possible.

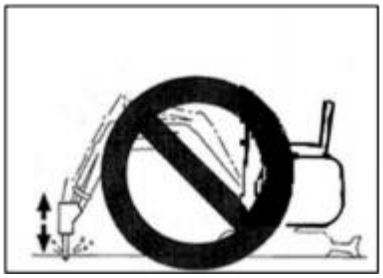

Periodical Replacement of Hydraulic Oil

With installed hydraulic breaking hammer, the hydraulic oil deteriorates faster than the normal operations. Ensure to replace the hydraulic oil and oil return filter element.

● The failure to replace timely will result in damage of machine and breaking hammer hydraulic system. To prolong the life of hydraulic system, ensure to replace the hydraulic oil and oil return filter element after the hours listed in table below.

● During the replacement of hydraulic oil, clean the oil suction filter screen. Replacement period (Hour)

Item	Hydraulic oil	Filter element
1st time	–	25
2nd time		100
Periodic	1200(600)	200

By taking the breaking hammer operating ratio of 100% for instance.

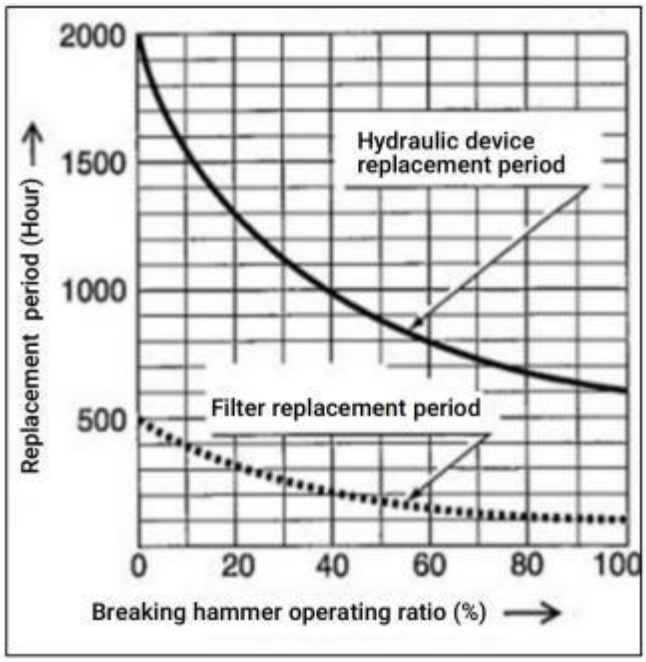

( ): For the use of common anti-wear

EXPLODED VIEW & PARTS LIST

Exploded View--Front Operation, Upper Frame, Lower Frame Assembly

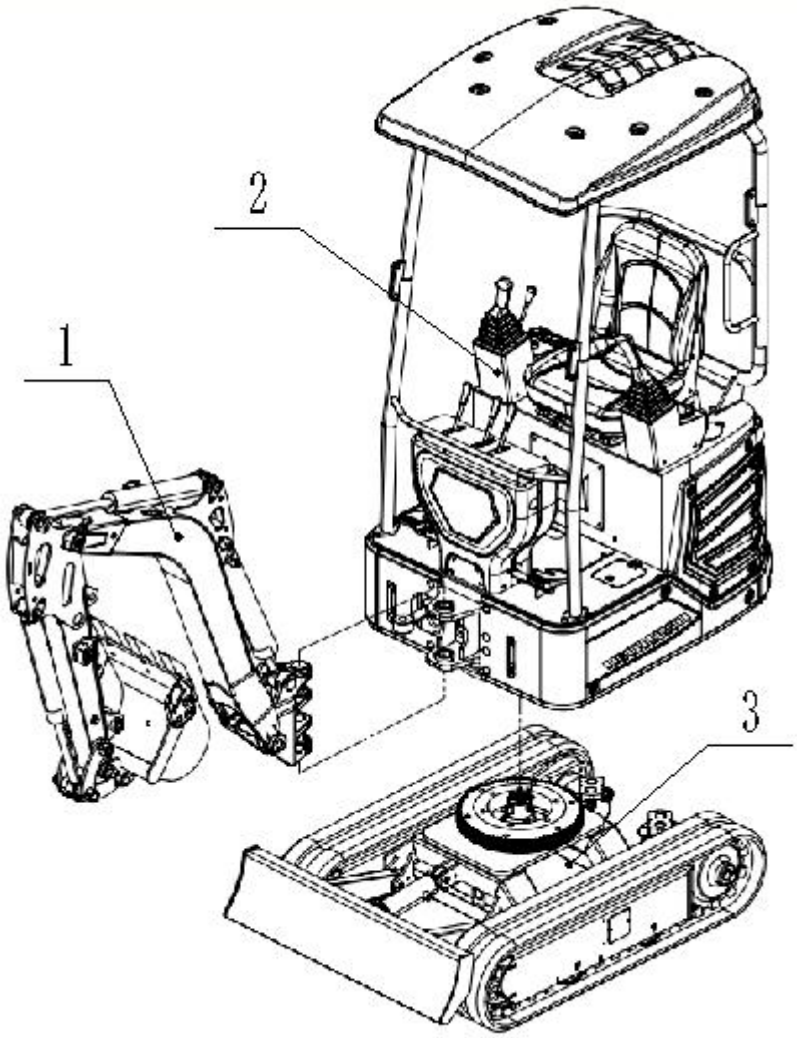

Parts List-- Front Operation, Upper Frame, Lower Frame Assembly

PART NO.	DESCRIPTION	QTY
1	Front operating device	1
2	Upper frame assembly	22
3	Lower frame assembly (retractable)	1

Exploded View--Front Operating Device Assembly-1

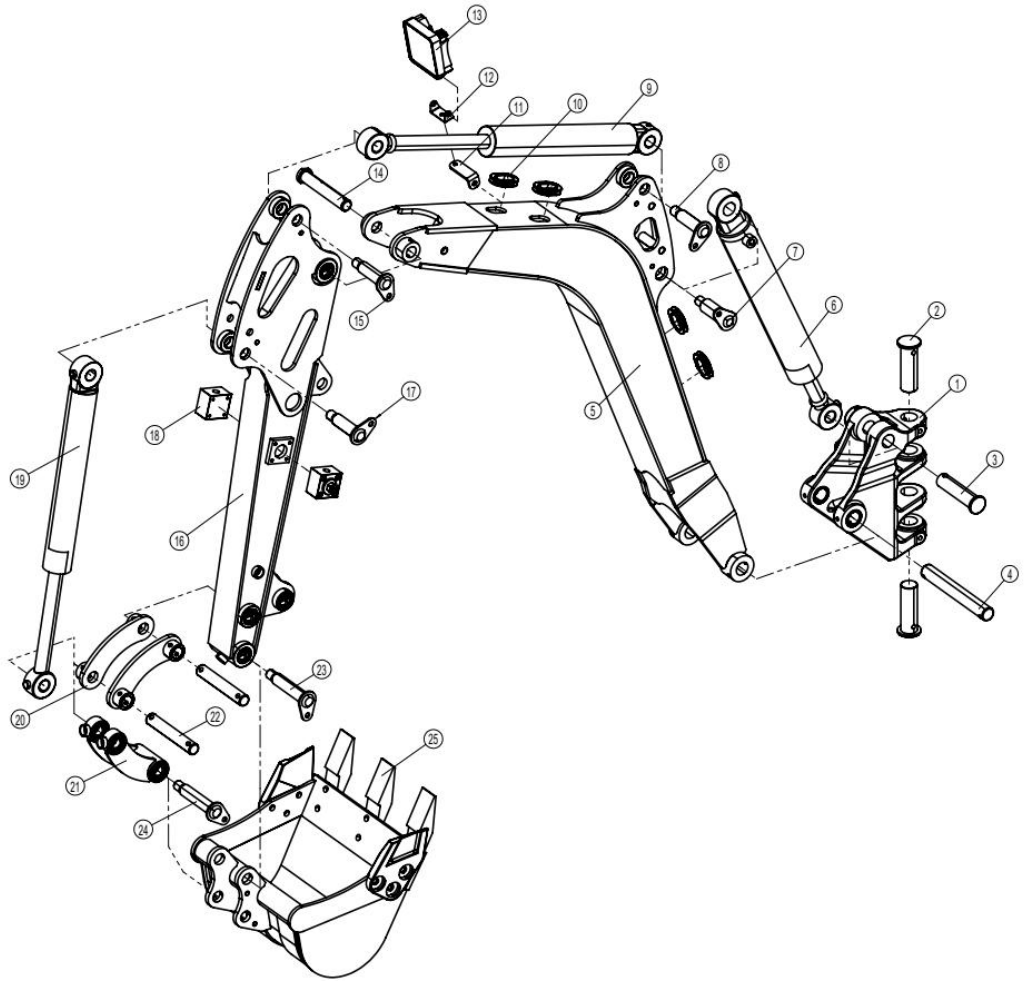

Parts List--Front Operating Device Assembly-1

PART NO.	DESCRIPTION	QTY	PART NO.	DESCRIPTION	QTY
1	Swing head	1	14	The pin shaft 15a	1
2	The pin shaft 11	2	15	The pin shaft 3	1
3	The pin shaft 12	1	16	Dipper	1
4	The pin shaft 16	1	17	The pin shaft 3	1
5	Main arm	1	18	globe valve	1
6	Move the arm cylinder	1	19	Dig bucket cylinder	1
7	The pin shaft 5	1	20	rocking bar	1
8	The pin shaft 3	1	21	connecting rod	1
9	The bucket pole cylinder	1	22	The pin shaft 9	1
10	Rubber protection circle	1	23	The pin shaft 7	1
11	Light bracket	1	24	The pin shaft 7	1
12	Light installation seat	1	25	Bucket	1
13	light	1			

Upper frame assembly(Part of the component explosion details)-2
Exploded View--Engine Assembl

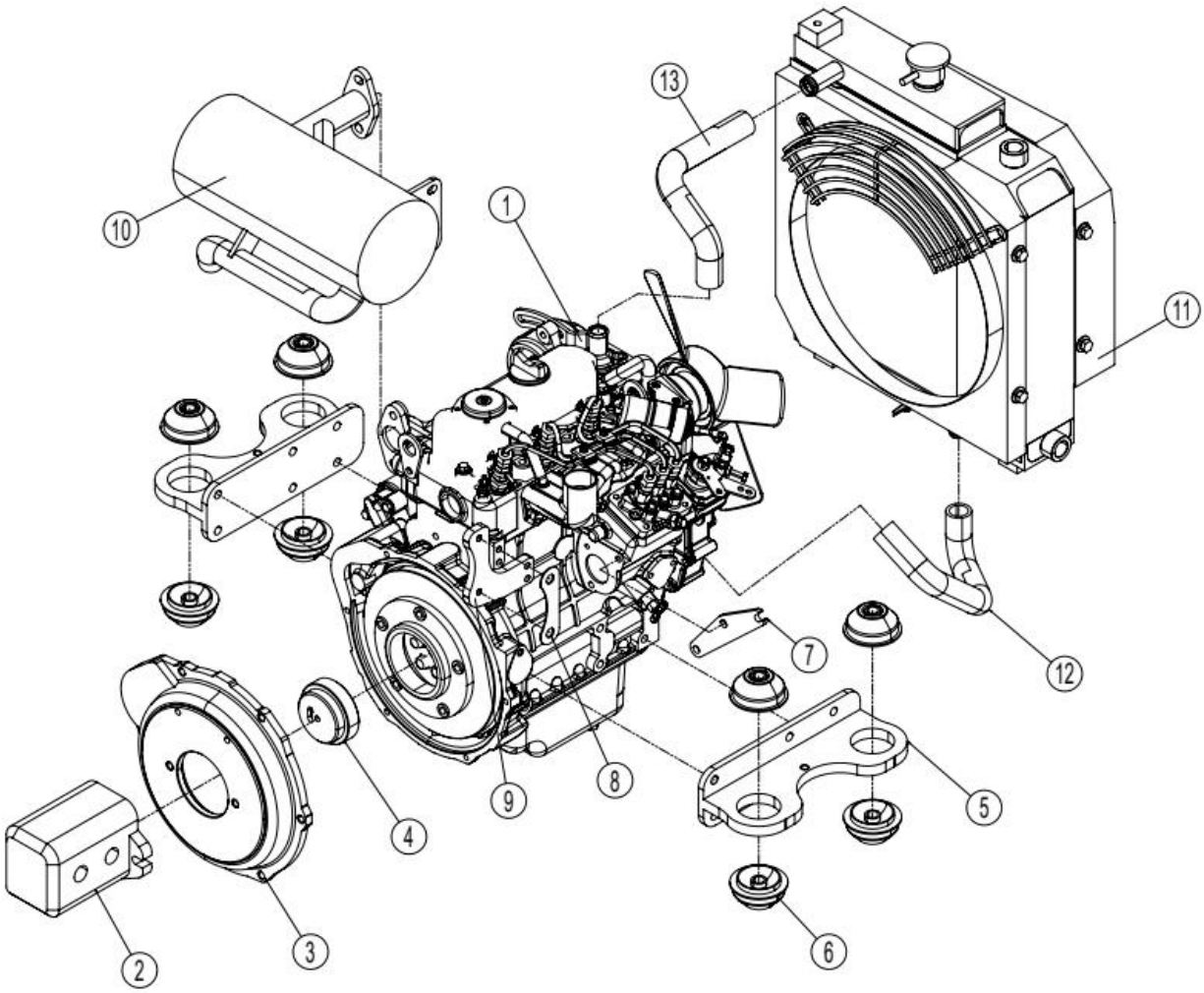

Parts List--Engine Assembly

PART NO.	DESCRIPTION	QTY	PART NO.	DESCRIPTION	QTY
1	Kubota Engine-D722	1	8	Backing board	
2	Dear pump	1	9	Silencer fixed board	
3	Courier shell	1	10	Silence	
4	Flywheel disc	1	11	Radiator	
5	Engine leg welding	2	12	Water absorption tube	
6	Engine shock absorber	8	13	Wet return	
7	The ttle pull fixing plate				

Exploded View--Front Hood Valve Operating Device

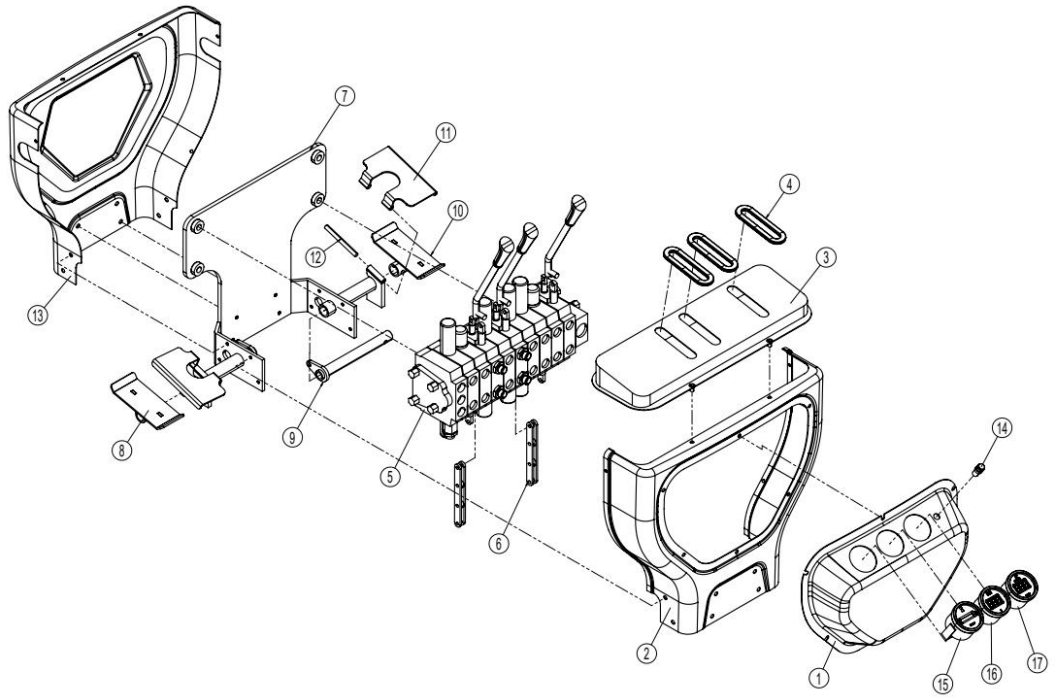

PART NO.	DESCRIPTION	QTY	PART NO.	DESCRIPTION	QTY
1	Instrument installation shell	1	10	Activated pedal	1
2	Operating table shell	1	11	Pinch plate	2
3	The upper shell of the operating table	1	12	Coupling shaft	2
4	Wiper scraper seal	3	13	Operate the front shell	1
5	Master valve	1	14	Oil pressure lamp	1
6	Joint lever	1	15	Hour meter	1
7	Main valve assembly	1	16	Voltmeter	1
8	Activated pedal	1	17	Water temperature indicator	1
9	Sliding shaft	2			

Exploded View--Get off parts-3

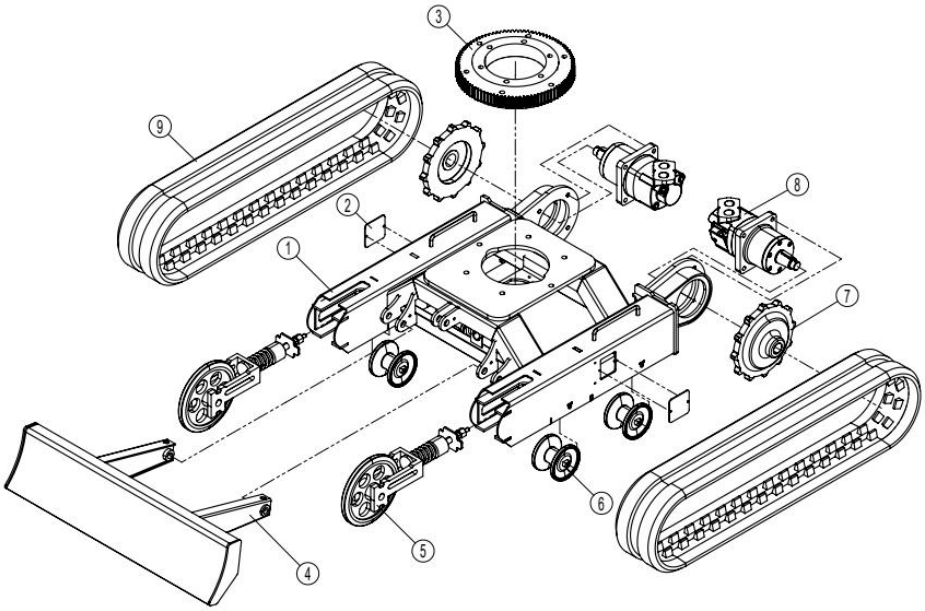

Parts List--Retractable Lower Frame Assembly-1

PART NO.	DESCRIPTION	QTY	PART NO.	DESCRIPTION	QTY
1	Get off the rack	1	6	Thrust wheel	4
2	Detent plate cover	2	7	Driving wheel	2
3	Rotary support	1	8	Walking motor	2
4	Dozer blade	1	9	Rubber belt track	2
5	Steerable wheel	2			

Exploded View--Hydraulic Pipeline Assembly

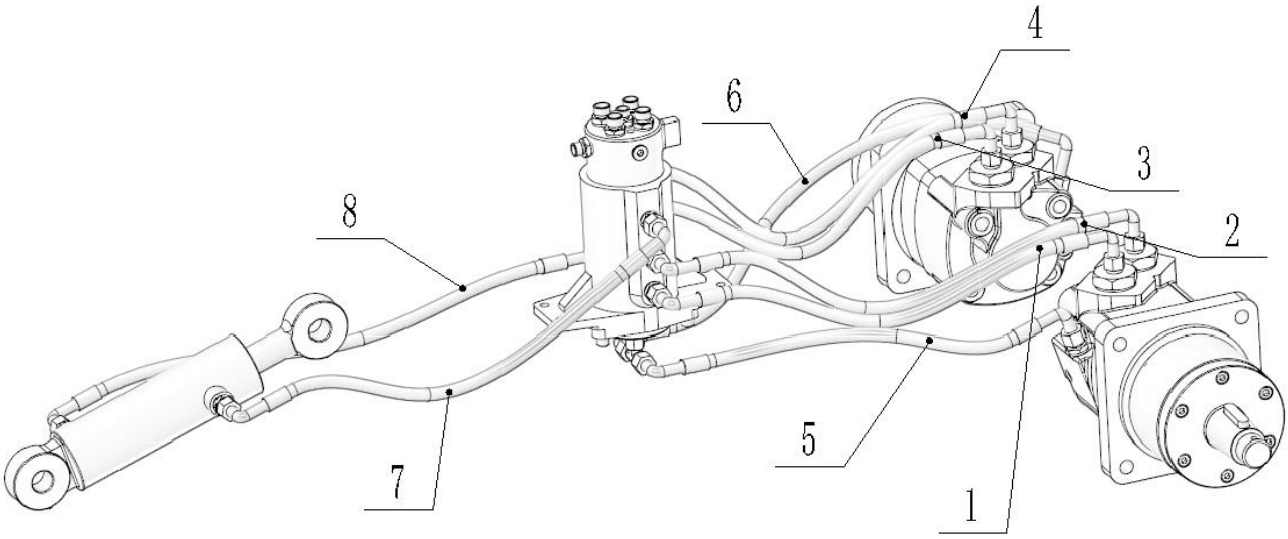

Parts List--Hydraulic Pipeline Assembly

PART NO.	DESCRIPTION	QTY	PART NO.	DESCRIPTION	QTY
1	Hydraulic hose	1	5	Hydraulic hose	1
2	Hydraulic hose	1	6	Hydraulic hose	1
3	Hydraulic hose	1	7	Hydraulic hose	1
4	Hydraulic hose	1	8	Hydraulic hose	1

Exploded View--Hydraulic Pipeline Assembly (Valve Part of the Front Hood)-1

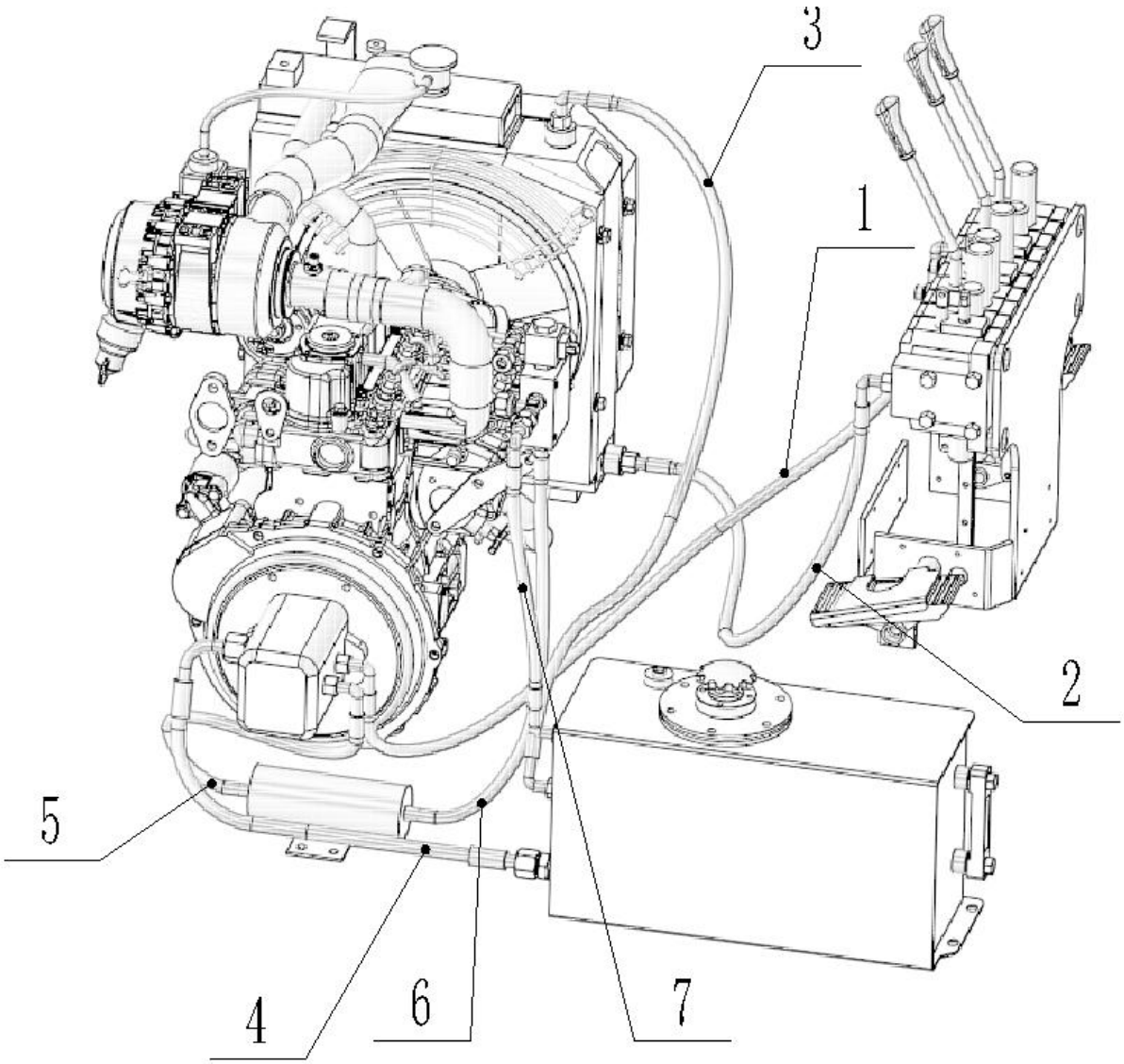

Parts List--Hydraulic Pipeline Assembly (Valve Part of the Front Hood)-1

PART NO.	DESCRIPTION	QTY	PART NO.	DESCRIPTION	QTY
1	Hydraulic hose	1	5	Hydraulic hose	1
2	Hydraulic hose	1	6	Hydraulic hose	1
3	Hydraulic hose	1	7	Hydraulic hose	1
4	Hydraulic hose	1			

Exploded View--Hydraulic Pipeline Assembly (Valve Part of the Front Hood)-2

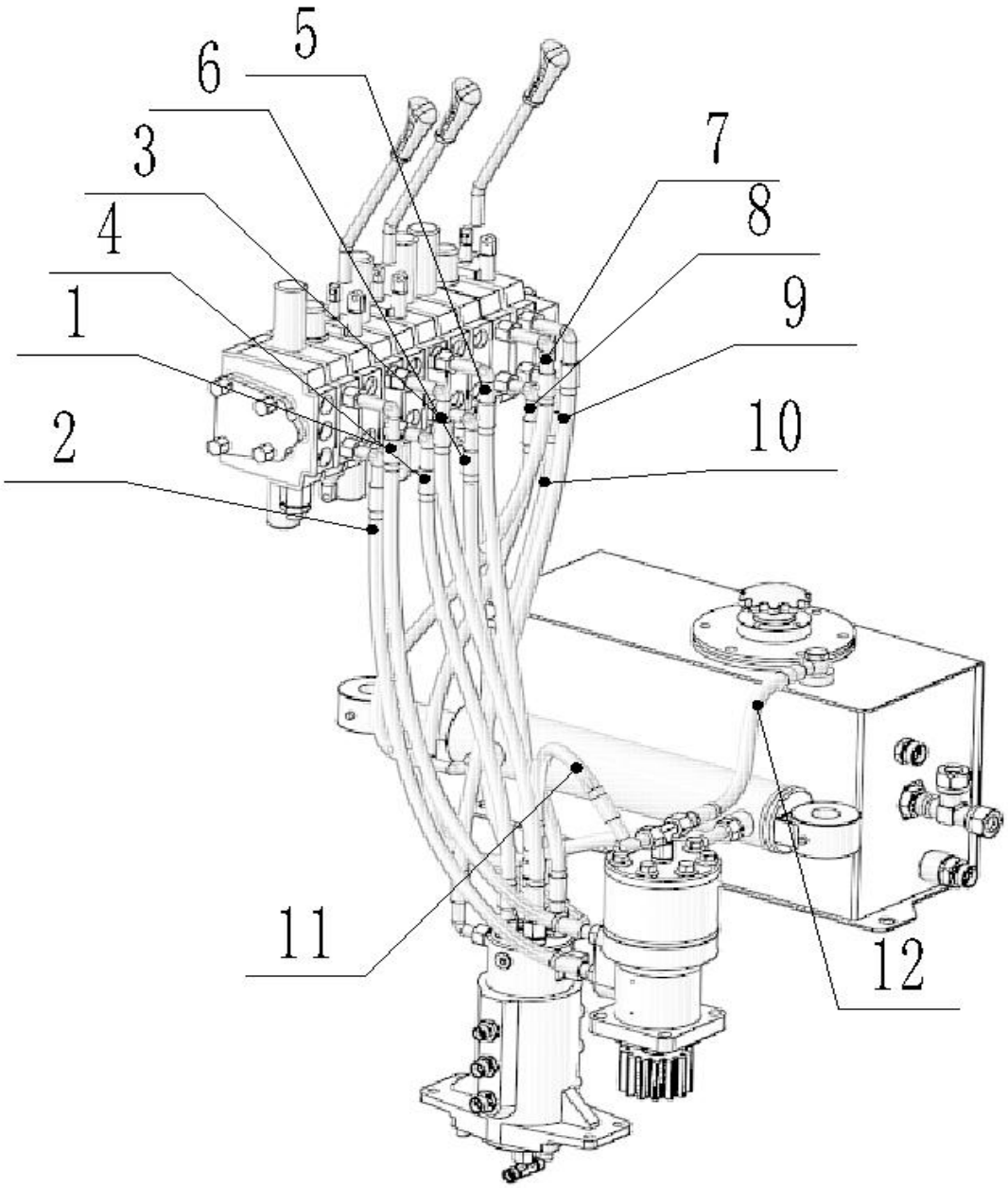

Parts List--Hydraulic Pipeline Assembly (Valve Part of the Front Hood)-1

PART NO.	DESCRIPTION	QTY	PART NO.	DESCRIPTION	QTY
1	Hydraulic hose	1	7	Hydraulic hose	1
2	Hydraulic hose	1	8	Hydraulic hose	1
3	Hydraulic hose	1	9	Hydraulic hose	1
4	Hydraulic hose	1	10	Hydraulic hose	1
5	Hydraulic hose	1	11	Hydraulic hose	1
6	Hydraulic hose	1			

QUESTION	REASON	ANSWER
The engine cannot start, the starter does not respond, and the instrument does not light up.	1.The battery is completely empty 2.cable link broken	1.Replace the battery or charge it 2.Check the disconnection and repair it
The engine cannot start. The starter can drive the engine to rotate.	1.The battery is low 2.Cables are loose 3.flooded cylinder	Recharge or replace battery Tighten cable glands Remove the spark plug. Start the machine with the key switch to remove excess fuel. Check the spark plug.
The engine can start but is difficult to start	1.Fuel level low 2.There is water in the fuel system 3.The fuel pipe is cracked 4.Fuel pump pressure is low 5.The engine oil model is wrong 6.Engine overheating	1.Add fuel to the appropriate location 2.Drain the water 3.Replace the fuel pipe 4.Replace and repair 5.Change the temperature and add appropriate type of engine oil. 6.Check the cooling system
The engine starts but runs erratically	1.Fuel system air intake 2.Engine speed regulator is loose 3.The fuel filter is clogged 4.The air filter is clogged	1.Replace the fuel line 2.Adjust the engine speed regulator 3.Replace filter element 4.Replace the air filter
Engine overheating	1.Cooling system blocked 2.Engine overload 3.The cooling system cover falls off 4.The fan belt is too loose	1.Clean and cool the tin tube 2.Adjust the engine speed to match the hydraulic system 3.Fasten the cover 4.Adjust the belt to the appropriate tension
The engine keeps emitting black smoke	1.The air filter is clogged 2.The amount of fuel injected by the fuel injection nozzle is too large.	1.Replace the air filter element 2.Replace the fuel injector
The engine emits white or blue smoke	1.Fuel quality is too poor 2.Too much oil is added	1.Replaced fuel 2.Add the appropriate position according to the engine oil dipstick

The whole machine has no action	1.1Hydraulic pump damaged 2.The safety valve is damaged 3.The hydraulic oil model does not match the temperature. 4.The safety lock is not opened	1.Repair or replace 2.Replace the safety valve 3.Replace the appropriate hydraulic oil 4.Open the safety lock
The whole machine moves slowly	1.1Hydraulic oil level is too low 2.Hydraulic oil viscosity is too high 3.Control valve is damaged 4.cylinder internal leakage 5.The hydraulic pump is damaged" "	1.Add hydraulic oil to the appropriate oil level gauge 2.Heating the hydraulic oil while the engine is idling 3.Repair or replace 4.Inspect and repair 5.Repair or Replace"
Unable to dig	1.Hydraulic oil level is too low 2.Hydraulic oil temperature is overheated 3.Hydraulic oil temperature is too low 4.The pressure safety valve is damaged 5.Hydraulic pump damaged	1.Add hydraulic oil to level 2.Check the cooling system 3.Machine idling to preheat hydraulic oil temperature 4.Replace the safety valve 5.Replace the hydraulic pump
The machine shuts down when doing movements	1.Fuel oil line sucks air 2.Engine hydraulic pump power does not match 3.Hydraulic oil filter is clogged	1.Check the fuel line or replace it 2.Increase engine speed 3.Replace the hydraulic oil filter element
Hydraulic oil temperature is too high	1.Hydraulic oil level is too low 2.Hydraulic filter element is clogged 3.The cooling system is blocked	1.Add hydraulic oil 2.Replace the hydraulic filter element 3.Clean the cooling system
Tracks fall off	1.The track is too loose	1.Tighten the track